# MAGNA3

## Model D

## Circulator pumps

50/60 Hz


be
think
innovate

GRUNDFOS

Table of contents

# 1. Product description


**Fig. 1** MAGNA3 model D

The Grundfos MAGNA3 model D circulator pumps are designed for circulating liquids in systems with variable flow requirements where you want to optimise the setting of the pump duty point, thus reducing energy costs.

## Applications

- Heating systems
  - main pump
  - mixing loops
  - heating surfaces
- air-conditioning and cooling systems
- domestic hot-water systems
- ground source heat pump systems
- solar-heating systems.

The MAGNA3 circulator pump is perfect for both new systems as well as for replacement. The pump is ideal when operating in systems requiring an automated adjustment of pressure. This pump range is the best choice as it eliminates the need for expensive bypass valves and similar components.

Furthermore, the pump is appropriate for systems with hot-water priority as an external signal can immediately force the pump to operate according to the maximum curve, for example in solar-heating systems. When using the pumps in domestic hot-water systems, please observe local legislation regarding pump house material. Grundfos strongly recommend that you use stainless-steel pumps in domestic hot-water applications to avoid corrosion.

## Application wizard

MAGNA3 features a built-in application wizard, which is accessed via the pump's operating panel. By specifying your system step by step, the application wizard identifies the best suited control mode for your application.

See *Application wizard*, page 42.

### Duty range

| Data | MAGNA3 (N) Single-head pump | MAGNA3 D Twin-head pump |
|---|---|---|
| Maximum flow rate | 78.5 $m^3/h$ | 150 $m^3/h$ |
| Maximum head | 18 metres | |
| Maximum system pressure | 1.6 MPa (16 bar) | |
| Liquid temperature | -10 to +110 °C | |

To ensure correct operation, it is important that the duty points in the system match the duty range of the pump.

## Characteristic features

- $AUTO_{ADAPT}$.
- $FLOW_{LIMIT}$.
- $FLOW_{ADAPT}$ - a combination of the $AUTO_{ADAPT}$ control mode and $FLOW_{LIMIT}$ function.
- Built-in Grundfos differential-pressure and temperature sensor.
- Proportional-pressure control.
- Constant-pressure control.
- Constant-temperature control.
- Constant-curve duty.
- Maximum or minimum curve duty.
- Automatic night setback.
- Self-explanatory user interface with TFT display and high quality silicone push-buttons.
- Heat energy monitor.
- Wireless multipump function.
- The complete range is available for a maximum system pressure of 16 bar, PN 16.

## Benefits

- Low energy consumption due to the $AUTO_{ADAPT}$ function, allowing the pump to adjust automatically to external factors, such as outside temperatures and consumption patterns.
- Simple installation.
- No maintenance and long life.
- Operating log history.
- Easy and simple system optimisation.
- External control and monitoring enabled via add-on modules.
- No external motor protection required.
- Insulating shells for heating systems supplied with single-head pumps.
- Wide temperature range due to thermal separation of the control box and pump media.

## Type key

| Code | Example | MAGNA3 | (D) | 80 | -120 | (F) | (N) | 360 |
|---|---|---|---|---|---|---|---|---|
| | **Type range**<br>MAGNA3 | | | | | | | |
| D | Single-head pump<br>Twin-head pump | | | | | | | |
| | Nominal diameter (DN) of inlet and outlet ports [mm] | | | | | | | |
| | Maximum head [dm] | | | | | | | |
| F | **Pipe connection**<br>Threaded<br>Flange | | | | | | | |
| N | **Pump housing material**<br>Cast iron<br>Stainless steel | | | | | | | |
| | Port-to-port length [mm] | | | | | | | |

## Model type

This data booklet covers MAGNA3 model D. The model version is stated on the nameplate. See fig. 2.


TM05 8798 5012

**Fig. 2** Model type on pump nameplate

You can find a comparison of the MAGNA3 model types in *4. Functions*, page 16.

## Pump heads in twin-head pumps

The twin-head pump housing has a flap valve on the outlet side. The flap valve seals off the port of the idle pump housing to prevent the pumped liquid from running back to the inlet side. See fig. 3. Due to the flap valve, there is a difference in the hydraulics between the two heads. See fig. 4.

TM06 1565 2514

**Fig. 3** Twin-head pump housing with flap valve

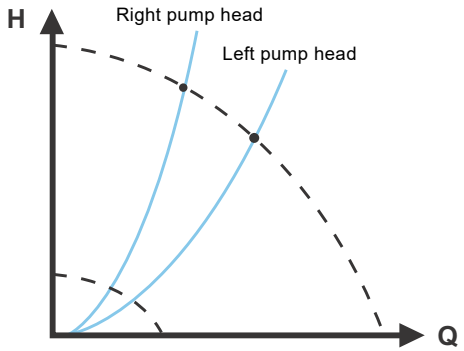


TM06 1566 2514

**Fig. 4** Hydraulic difference between the two heads

## Performance range, MAGNA3

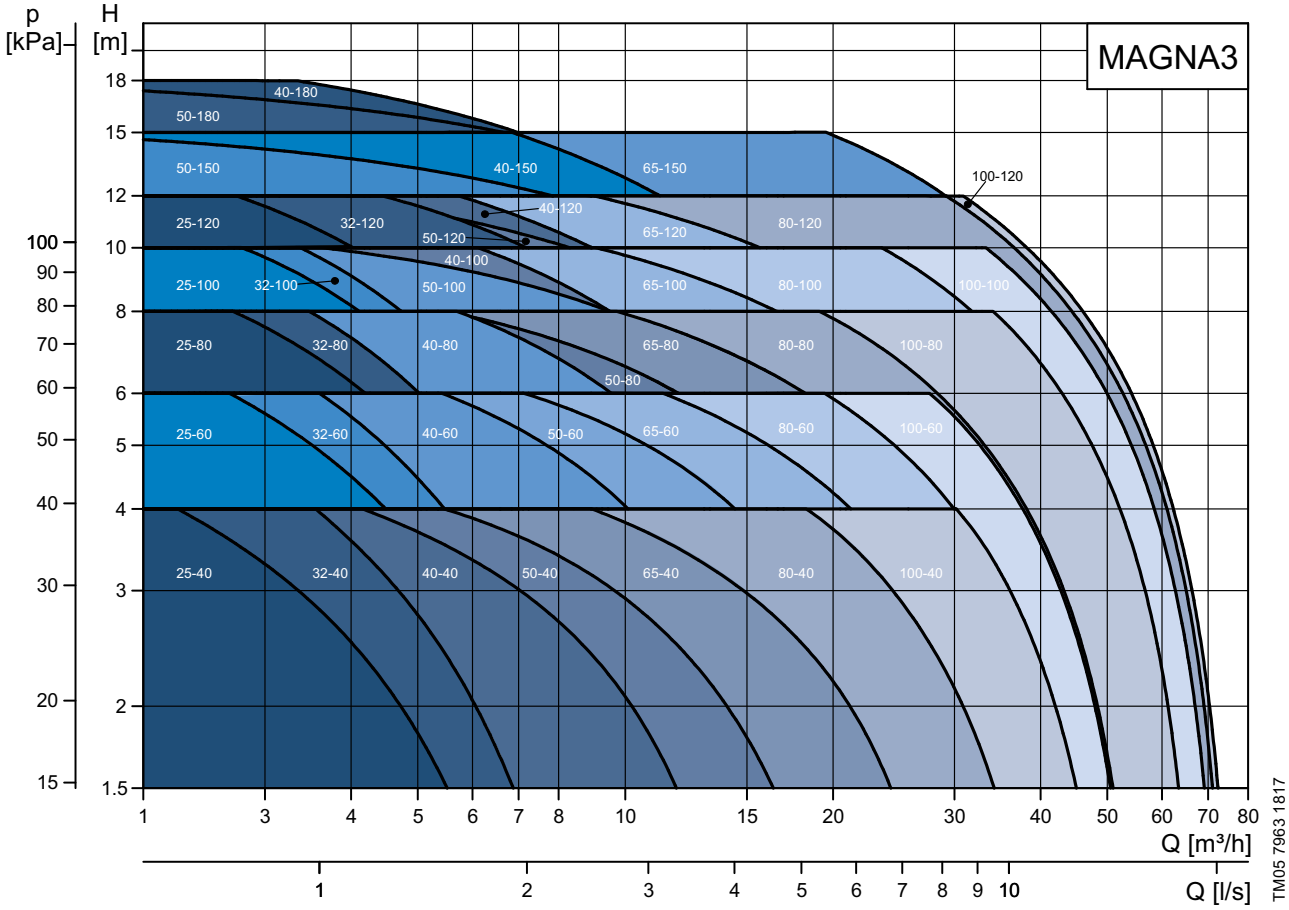


**Fig. 5** Performance range, MAGNA3

**Note:** MAGNA3 32-120 is available both as a flange model and a threaded model, but with different performance.

## Performance range, MAGNA3 D single-head operation

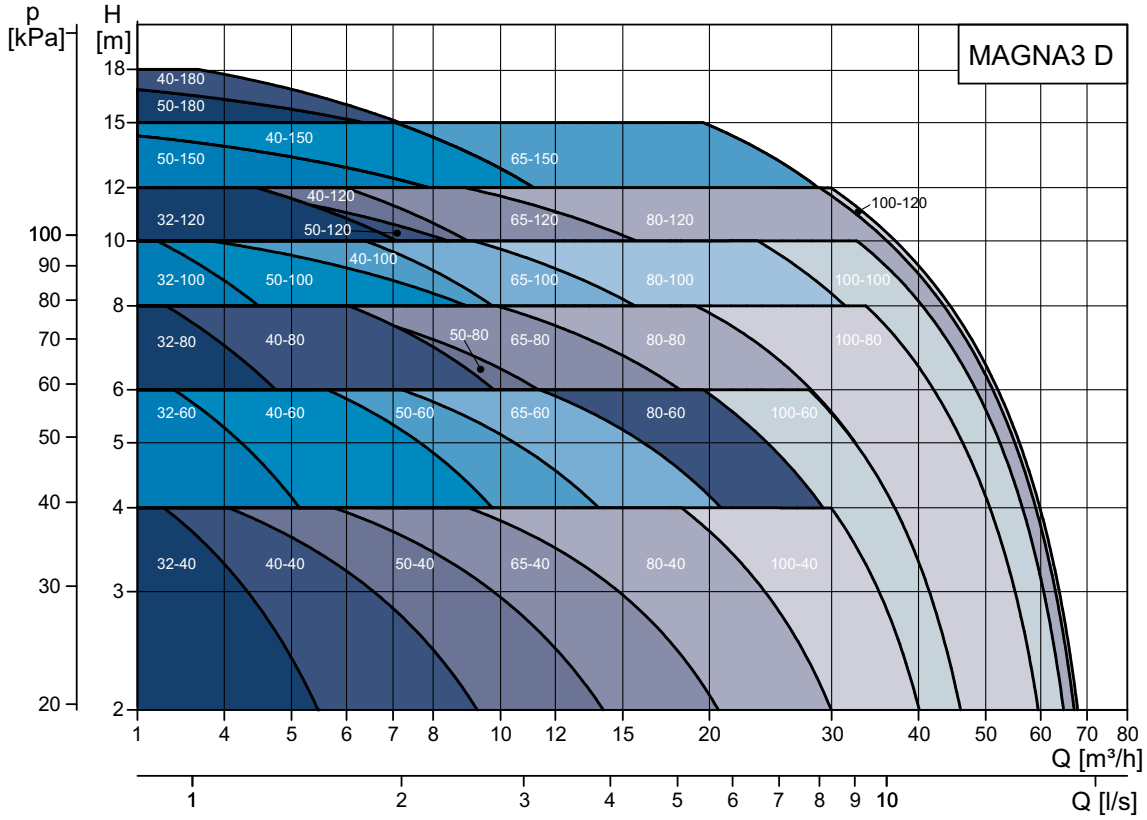


**Fig. 6** Performance range, MAGNA3 D single-head operation

## Performance range, MAGNA3 D twin-head operation

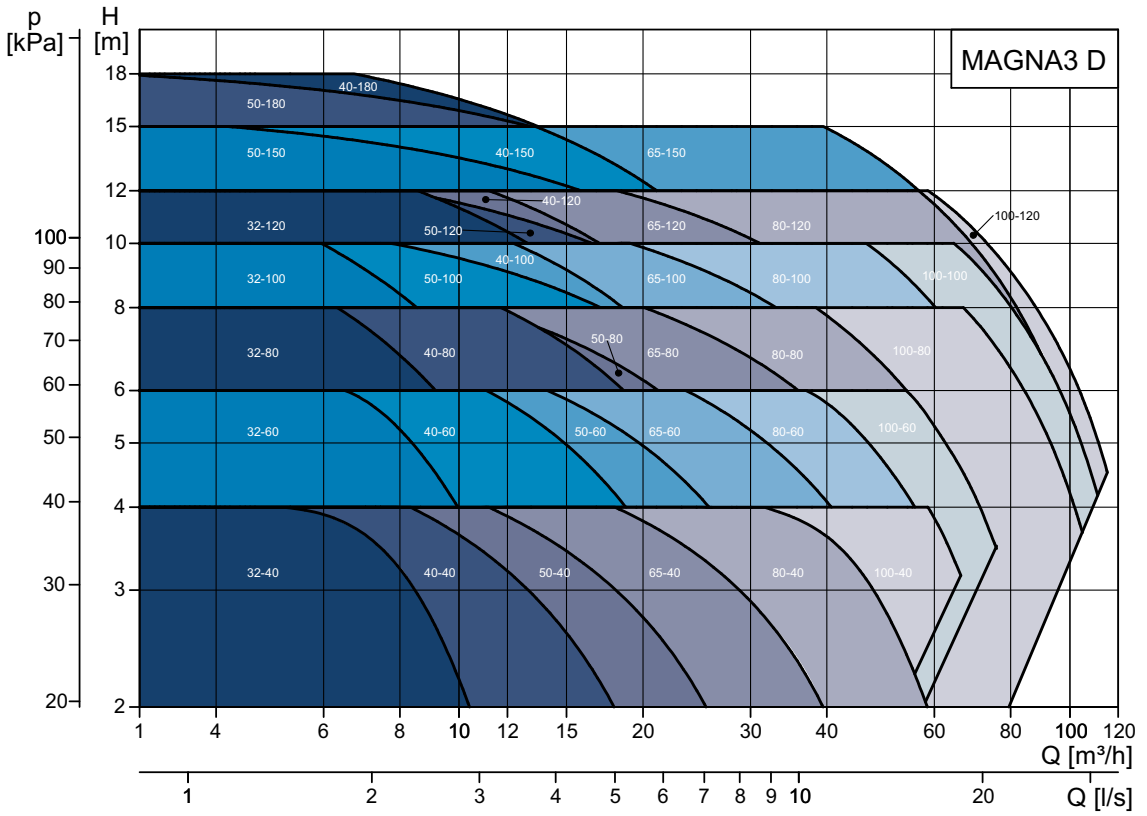


**Fig. 7** Performance range, MAGNA3 D twin-head operation

# 2. Product range

## Single-head pumps

| Pump type | Port-to-port length [mm] | Threaded pipe connection | | | | | Electrical connection | Data booklet page |
|---|---|---|---|---|---|---|---|---|
| | | Cast iron | | | | Stainless steel | | |
| | | PN 6 | PN 10 | PN 6/10 | PN 16 | PN 10 | | |
| MAGNA3 25-40 (N) | 180 | | • | | • | • | Plug | 46 |
| MAGNA3 25-60 (N) | 180 | | • | | • | • | Plug | 47 |
| MAGNA3 25-80 (N) | 180 | | • | | • | • | Plug | 48 |
| MAGNA3 25-100 (N) | 180 | | • | | • | • | Plug | 49 |
| MAGNA3 25-120 (N) | 180 | | • | | • | • | Plug | 50 |
| MAGNA3 32-40 (N) | 180 | | • | | • | • | Plug | 51 |
| MAGNA3 32-60 (N) | 180 | | • | | • | • | Plug | 53 |
| MAGNA3 32-80 (N) | 180 | | • | | • | • | Plug | 55 |
| MAGNA3 32-100 (N) | 180 | | • | | • | • | Plug | 57 |
| MAGNA3 32-120 (N) | 180 | | • | | • | • | Plug | 59 |

| Pump type | Port-to-port length [mm] | Flange connection | | | | | Electrical connection | Data booklet page |
|---|---|---|---|---|---|---|---|---|
| | | Cast iron | | | | Stainless steel | | |
| | | PN 6 | PN 10 | PN 6/10 | PN 16 | PN 6/10 | | |
| MAGNA3 32-40 F (N) | 220 | | | • | • | • | Plug | 60 |
| MAGNA3 32-60 F (N) | 220 | | | • | • | • | Plug | 62 |
| MAGNA3 32-80 F (N) | 220 | | | • | • | • | Plug | 64 |
| MAGNA3 32-100 F (N) | 220 | | | • | • | • | Plug | 66 |
| MAGNA3 32-120 F (N) | 220 | | | • | • | • | Terminals | 68 |
| MAGNA3 40-40 F (N) | 220 | | | • | • | • | Plug | 70 |
| MAGNA3 40-60 F (N) | 220 | | | • | • | • | Plug | 72 |
| MAGNA3 40-80 F (N) | 220 | | | • | • | • | Terminals | 74 |
| MAGNA3 40-100 F (N) | 220 | | | • | • | • | Terminals | 76 |
| MAGNA3 40-120 F (N) | 250 | | | • | • | • | Terminals | 78 |
| MAGNA3 40-150 F (N) | 250 | | | • | • | • | Terminals | 80 |
| MAGNA3 40-180 F (N) | 250 | | | • | • | • | Terminals | 82 |
| MAGNA3 50-40 F (N) | 240 | | | • | • | • | Terminals | 84 |
| MAGNA3 50-60 F (N) | 240 | | | • | • | • | Terminals | 86 |
| MAGNA3 50-80 F (N) | 240 | | | • | • | • | Terminals | 88 |
| MAGNA3 50-100 F (N) | 280 | | | • | • | • | Terminals | 90 |
| MAGNA3 50-120 F (N) | 280 | | | • | • | • | Terminals | 92 |
| MAGNA3 50-150 F (N) | 280 | | | • | • | • | Terminals | 94 |
| MAGNA3 50-180 F (N) | 280 | | | • | • | • | Terminals | 96 |
| MAGNA3 65-40 F (N) | 340 | | | • | • | • | Terminals | 98 |
| MAGNA3 65-60 F (N) | 340 | | | • | • | • | Terminals | 100 |
| MAGNA3 65-80 F (N) | 340 | | | • | • | • | Terminals | 102 |
| MAGNA3 65-100 F (N) | 340 | | | • | • | • | Terminals | 104 |
| MAGNA3 65-120 F (N) | 340 | | | • | • | • | Terminals | 106 |
| MAGNA3 65-150 F (N) | 340 | | | • | • | • | Terminals | 108 |
| MAGNA3 80-40 F | 360 | • | • | | • | | Terminals | 110 |
| MAGNA3 80-60 F | 360 | • | • | | • | | Terminals | 112 |
| MAGNA3 80-80 F | 360 | • | • | | • | | Terminals | 114 |
| MAGNA3 80-100 F | 360 | • | • | | • | | Terminals | 116 |
| MAGNA3 80-120 F | 360 | • | • | • | • | | Terminals | 118 |
| MAGNA3 100-40 F | 450 | • | • | | • | | Terminals | 120 |
| MAGNA3 100-60 F | 450 | • | • | | • | | Terminals | 122 |
| MAGNA3 100-80 F | 450 | • | • | | • | | Terminals | 124 |
| MAGNA3 100-100 F | 450 | • | • | | • | | Terminals | 126 |
| MAGNA3 100-120 F | 450 | • | • | • | • | | Terminals | 128 |

## Twin-head pumps

| Pump type | Port-to-port length [mm] | Threaded pipe connection | | Electrical connection | Data booklet page |
|---|---|---|---|---|---|
| | | Cast iron | | | |
| | | PN 10 | PN 16 | | |
| MAGNA3 D 32-40 | 180 | • | • | Plug | 52 |
| MAGNA3 D 32-60 | 180 | • | • | Plug | 54 |
| MAGNA3 D 32-80 | 180 | • | • | Plug | 56 |
| MAGNA3 D 32-100 | 180 | • | • | Plug | 58 |

| Pump type | Port-to-port length [mm] | Flange connection | | | | Electrical connection | Data booklet page |
|---|---|---|---|---|---|---|---|
| | | Cast iron | | | | | |
| | | PN 6 | PN 10 | PN 6/10 | PN 16 | | |
| MAGNA3 D 32-40 F | 220 | | | • | • | Plug | 61 |
| MAGNA3 D 32-60 F | 220 | | | • | • | Plug | 63 |
| MAGNA3 D 32-80 F | 220 | | | • | • | Plug | 65 |
| MAGNA3 D 32-100 F | 220 | | | • | • | Plug | 67 |
| MAGNA3 D 32-120 F | 220 | | | • | • | Terminals | 69 |
| MAGNA3 D 40-40 F | 220 | | | • | • | Plug | 71 |
| MAGNA3 D 40-60 F | 220 | | | • | • | Plug | 73 |
| MAGNA3 D 40-80 F | 220 | | | • | • | Terminals | 75 |
| MAGNA3 D 40-100 F | 220 | | | • | • | Terminals | 77 |
| MAGNA3 D 40-120 F | 250 | | | • | • | Terminals | 79 |
| MAGNA3 D 40-150 F | 250 | | | • | • | Terminals | 81 |
| MAGNA3 D 40-180 F | 250 | | | • | • | Terminals | 83 |
| MAGNA3 D 50-40 F | 240 | | | • | • | Terminals | 85 |
| MAGNA3 D 50-60 F | 240 | | | • | • | Terminals | 87 |
| MAGNA3 D 50-80 F | 240 | | | • | • | Terminals | 89 |
| MAGNA3 D 50-100 F | 280 | | | • | • | Terminals | 91 |
| MAGNA3 D 50-120 F | 280 | | | • | • | Terminals | 93 |
| MAGNA3 D 50-150 F | 280 | | | • | • | Terminals | 95 |
| MAGNA3 D 50-180 F | 280 | | | • | • | Terminals | 97 |
| MAGNA3 D 65-40 F | 340 | | | • | • | Terminals | 99 |
| MAGNA3 D 65-60 F | 340 | | | • | • | Terminals | 101 |
| MAGNA3 D 65-80 F | 340 | | | • | • | Terminals | 103 |
| MAGNA3 D 65-100 F | 340 | | | • | • | Terminals | 105 |
| MAGNA3 D 65-120 F | 340 | | | • | • | Terminals | 107 |
| MAGNA3 D 65-150 F | 340 | | | • | • | Terminals | 109 |
| MAGNA3 D 80-40 F | 360 | • | • | | • | Terminals | 111 |
| MAGNA3 D 80-60 F | 360 | • | • | | • | Terminals | 113 |
| MAGNA3 D 80-80 F | 360 | • | • | | • | Terminals | 115 |
| MAGNA3 D 80-100 F | 360 | • | • | | • | Terminals | 117 |
| MAGNA3 D 80-120 F | 360 | • | • | | • | Terminals | 119 |
| MAGNA3 D 100-40 F | 450 | • | • | | • | Terminals | 121 |
| MAGNA3 D 100-60 F | 450 | • | • | | • | Terminals | 123 |
| MAGNA3 D 100-80 F | 450 | • | • | | • | Terminals | 125 |
| MAGNA3 D 100-100 F | 450 | • | • | | • | Terminals | 127 |
| MAGNA3 D 100-120 F | 450 | • | • | | • | Terminals | 129 |

**Note:** You find the product numbers of the various pump variants on page 142.

## Pump selection

All pumps have a "best point" ($\eta_{max}$), indicating where the pump is working most efficiently.

Consider the parameters in the following section.

### Pump size

The system characteristic is used together with the performance curve of the pump for sizing and correct pump selection.

The selection of pump size must be based on the following:

- required maximum flow
- maximum pressure loss in the system.

Refer to the system characteristics to determine the duty point. See fig. 8.

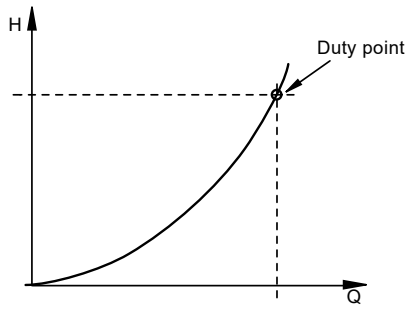


TM02 2040 3301

**Fig. 8** System characteristic

### Operating conditions

You must check whether the operating conditions are fulfilled, i.e:

- liquid quality and temperature
- ambient conditions
- minimum inlet pressure
- maximum operating pressure.

See also *5. Operating conditions*, page 34.

### Control modes

- $AUTO_{ADAPT}$ (factory setting) which is suitable for most installations.
- $FLOW_{ADAPT}$ in systems where flow limitation is required.
- Proportional-pressure control in systems with considerable pressure losses in relation to large flow variations.
- Constant-pressure control in systems with insignificant pressure losses in relation to large flow variations.
- Constant-temperature control in systems with a fixed system characteristic, for example domestic hot-water systems.
- Differential-temperature control in heating and cooling systems.
- Constant flow in systems where a constant flow is required independently of the head.
- Constant-curve duty.

For further information on control and operating modes, see *4. Functions*, page 16.

#### Automatic determination of setpoint

If you know the duty point, you can enter the value on the display when setting the pump. The pump then automatically calculates the corresponding setpoint. See fig. 9.

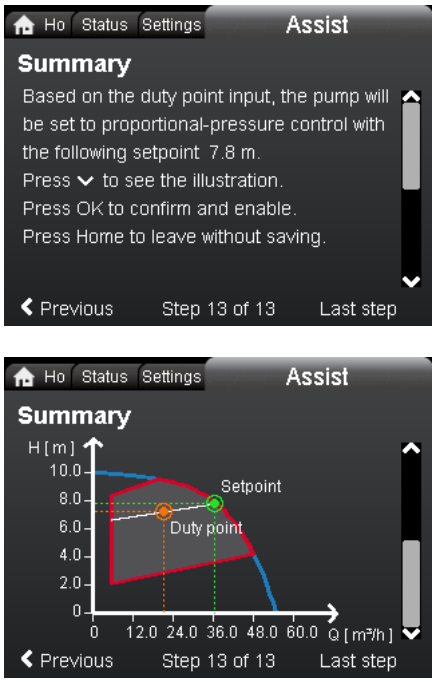


4.1.1.0.0.0 - 13A

4.1.1.0.0.0 - 13B

**Fig. 9** Example of setpoint calculation based on chosen control mode and entered Q and H values

### Communication

The Grundfos CIM modules (Communication Interface Module) enable the MAGNA3 to connect to standard fieldbus networks, offering substantial benefits:

- complete process control and monitoring
- modular design, prepared for future requirements
- based on standard functional profiles
- simple configuration and easy installation
- open communication standards
- reading warning and alarm indications.

For further details, see *CIM modules*, page 27.

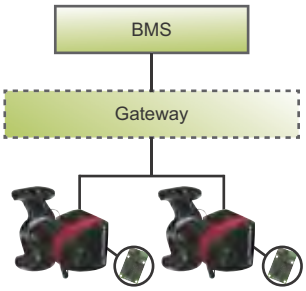


TM07 0297 4817

**Fig. 10** Example of typical building management system (BMS)

**Note:** A gateway is a device that facilitates the transfer of data between two different networks based on different communication protocols.

# 3. System applications

## Heating systems

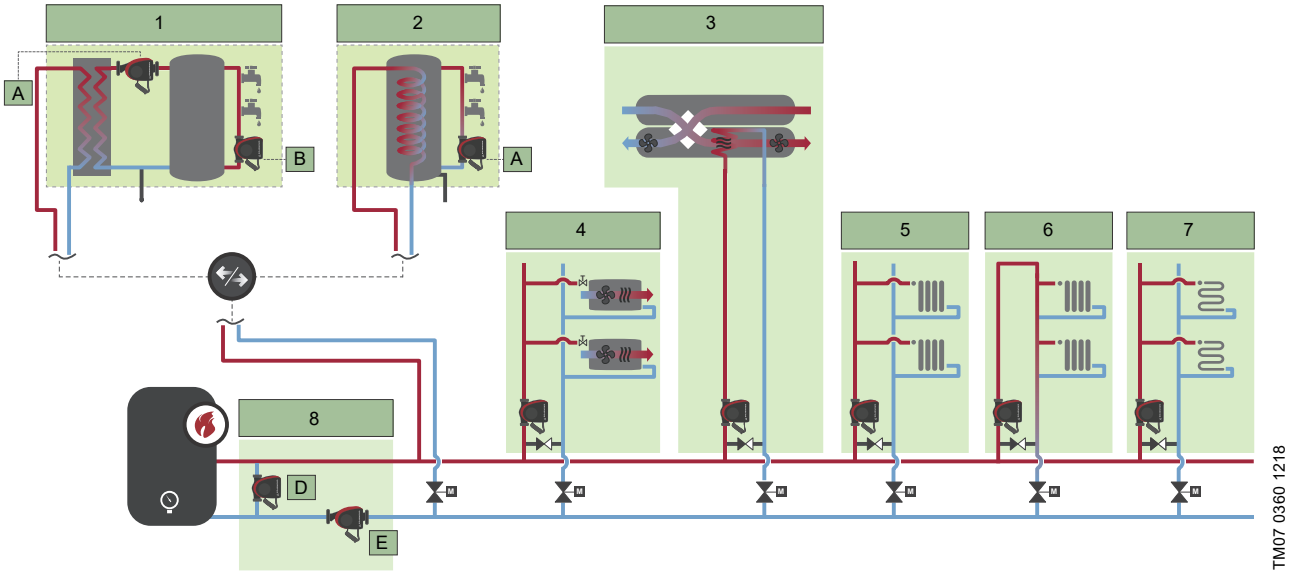


**Fig. 11** Functional drawing of a heating system in a commercial building

| Pos. | Description |
|---|---|
| 1 | Hot water |
| 1A | Charging pump |
| 1B | Recirculation |
| 2 | Hot water |
| 2A | Recirculation |
| 3 | Air handling unit |
| 4 | Fan coil unit |
| 5 | Radiator two-pipe system |
| 6 | Radiator one-pipe system |
| 7 | Underfloor/ceiling |
| 8 | Boiler pump |
| 8D | Shunt/buffer |
| 8E | "Primary only" system |

The following sections provide recommendations on which control mode to choose according to your application and where the pump is placed in the system.

In addition, you can use MAGNA3's built-in application wizard to help you identify which control mode is best suited your application. See *Application wizard*, page 42.

### 1A. Hot water, charging pump

Hot-water applications often have an external controller, which starts the pump when the temperature falls below a desired setpoint. The pump will run until the temperature in the tank is back up.

If the design flow is known, it can be set directly on the pump. The suitable control mode is constant flow.

If only the desired differential temperature across the plate heat exchanger is known, constant speed curves can be chosen and adjusted to reach the desired delta T.

See *Constant flow*, page 22, and *Constant curve*, page 23.

### 1B. Hot water, recirculation

The constant-temperature control mode together with the pump's internal temperature sensor makes it possible to maintain any given temperature of the return water. The desired temperature setpoint is set directly on the pump.

If you want to maintain a certain temperature at a critical point furthest out in the system, the constant-temperature control mode can be used in combination with an external temperature sensor.

See *Constant temperature*, page 21.

### 2A. Hot water, recirculation

See *1B. Hot water, recirculation*.

## 3. Air handling unit

### Constant flow

If the air flow temperature and thereby the heat output is controlled by for example a motorised valve, the system is typically operating with constant flow. Therefore, we recommend that the pump operates in the constant-flow control mode.

See *Constant flow*, page 22.

### Variable flow

Normally, the distance between the pump and the air handling unit is short, eliminating pressure losses almost completely even if the flow varies. Therefore, the constant-pressure control mode is suitable in this type of application.

See *Constant pressure*, page 21.

## 4. Fan coil unit

Typically, fan coil units are situated at a considerable distance from the pump.

Therefore, depending on how many fan coils are operating and at which demand, large variations in pressure loss will occur.

In such applications proportional pressure is the recommended control mode.

If the pressure losses are unknown, you can choose the $AUTO_{ADAPT}$ control mode, which will automatically adjust the pump performance to the actual system characteristic.

See *Proportional pressure*, page 20, and *$AUTO_{ADAPT}$*, page 19.

## 5. Radiator, two pipe

Since these applications have varying pressure losses due to the distance between the pump and radiators, we recommended that the pump operates in the proportional-pressure control mode.

If the pressure losses are unknown, it is possible to use the $AUTO_{ADAPT}$ control mode, which will automatically adjust the pump performance to the actual system characteristic.

See *Proportional pressure*, page 20, and *$AUTO_{ADAPT}$*, page 19.

## 6. Radiator, one pipe

In one-pipe radiator systems the flow is typically constant, making the pressure losses constant as well. Therefore, pumps in these applications are best suited to operate in constant-pressure control mode.

Because these applications are often designed with a specific differential temperature, it is possible to adjust the constant-pressure setpoint until this differential temperature is achieved.

See *Constant pressure*, page 21.

## 7. Underfloor/ceiling

In these systems the flow will vary depending on how many rooms are in operation. However, since the distance is short between the pump and manifold, to which the pipes are connected, there is no variation in pressure losses. Because of this the constant-pressure control mode is the optimum choice.

See *Constant pressure*, page 21.

## 8D. Shunt/buffer

### Constant temperature with internal sensor

If both the return temperature and the desired minimum temperature back to the boiler are known, you can calculate the required flow temperature supplied by the shunt pump.

The calculated flow temperature is set directly on the pump, when setting the control mode to constant temperature.

See *Constant temperature*, page 21.

### Constant temperature with external sensor

The minimum required return temperature back to the boiler can be measured and controlled by the use of an external temperature sensor placed close to the boiler. This temperature can then be set directly on the pump together with the constant-temperature control mode.

See *Constant temperature*, page 21.

### Constant differential temperature

If the purpose of the boiler shunt pump is to secure that a maximum differential temperature across a boiler is not exceeded, choose the differential temperature control mode. Despite load variations, the differential temperature is then kept on a desired level. This requires an additional temperature sensor.

## 8E. "Primary only" system

These pumps are characterised by operating with large variations in flow. Depending on the distance between the pump and the last branch served by the pump, either constant-pressure or proportional-pressure control modes can be chosen.

Typically, proportional pressure will be the better option if the pressure is above 5 m or the distance between the pump and the last branch exceeds 10 m.

On the other hand, if pressure loss variations are limited because all branches are connected closer to the pump, constant pressure will be the recommended control mode.

See *Proportional pressure*, page 20, and*Constant pressure*, page 21.

## Cooling systems

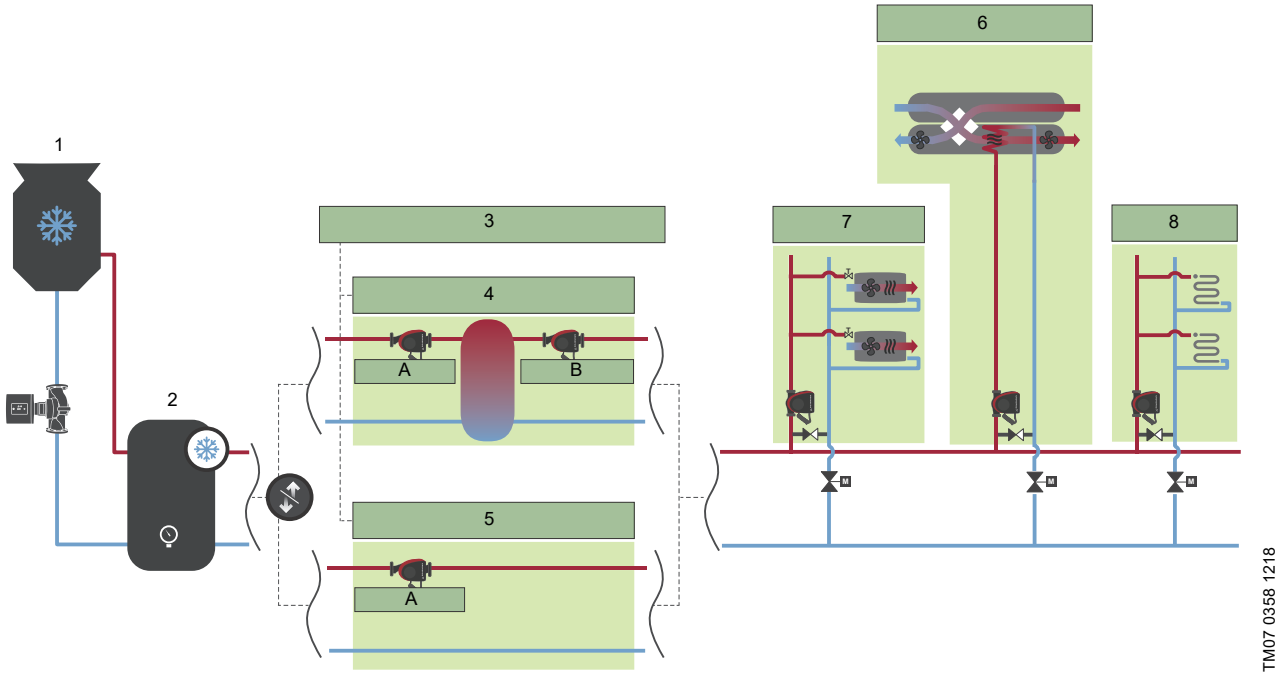


**Fig. 12** Functional drawing of a cooling system in a commercial building

| Pos. | Description |
|---|---|
| 1 | Cooling tower |
| 2 | Cooling source |
| 3 | Chiller pump |
| 4 | Primary/secondary system |
| 4A | Primary pump |
| 4B | Secondary pump |
| 5 | "Primary only" system |
| 5A | Primary pump |
| 6 | Air handling unit |
| 7 | Fan coil unit |
| 8 | Underfloor/ceiling |

The following sections provide recommendations on which control mode to choose according to your application and where the pump is placed in the system.

In addition, you can use MAGNA3's built-in application wizard to help you identify which control mode is best suited your application. See *Application wizard*, page 42.

### 4A. Primary/secondary system, primary pump

#### Constant temperature

If the setpoint temperature from the chiller is known and the aim is to maintain this temperature all the way to the buffer tank, the constant-temperature control mode can be chosen.

Depending on the position of the pump, the internal or an external temperature sensor can be used to measure the temperature.

See *Constant temperature*, page 21.

#### Differential temperature

If the design differential temperature across the chiller is known, the differential temperature control mode can be selected. This requires an additional temperature sensor.

See *Differential temperature*, page 22.

#### Constant flow

In cases where the chiller is not varying, the pump is typically started and stopped by the chiller. This indicates a requirement for constant flow, hence this being the optimum control mode.

See *Constant flow*, page 22.

#### Constant curve

In cases where the chiller is not varying and the required delta-T is known, the constant-curve control mode can be used. Here, the constant curve is adjusted until the desired delta-T is obtained.

See *Constant curve*, page 23.

### 4B. Primary/secondary system, secondary pump

Secondary pumps are exposed to large variations in flow and pressure losses due to load variations in the system. For this reason, proportional pressure is the recommended control mode.

If the pressure losses are below 5 mWc, the constant pressure control mode is a good alternative.

If the pressure losses are unknown, you can choose the $AUTO_{ADAPT}$ control mode, which will automatically adjust the pump performance to the actual system characteristic.

See *Proportional pressure*, page 20, *Constant pressure*, page 21, and *$AUTO_{ADAPT}$*, page 19.

### 5A. "Primary only" system, primary pump

These pumps are exposed to large variations in flow and pressure losses due to load variations in the system. For this reason, proportional pressure is the recommended control mode.

If the pressure losses are below 5 mWc, the constant-pressure control mode is a good alternative.

If the pressure losses are unknown, you can choose the $AUTO_{ADAPT}$ control mode, which will automatically adjust the pump performance to the actual system characteristic.

See *Proportional pressure*, page 20, *Constant pressure*, page 21, and *$AUTO_{ADAPT}$*, page 19.

### 6. Air handling unit

If the required flow in the coil is known, constant flow is the preferred control mode. Here, the pump will adjust to the needed pressure.

The actual heat supply is controlled by the motorised valves as shown in fig. 12.

If the pressure loss in the coil is known, constant pressure is a suitable control mode. This control mode ensures that the pump is able to overcome the pressure loss.

See *Constant flow*, page 22 and *Constant pressure*, page 21.

### 7. Fan coil unit

Fan coil applications are characterised by variable flow due to a varying number of coils in operation. The more coils in operation the higher the pressure loss.

Therefore, proportional pressure is the optimum control mode.

See *Proportional pressure*, page 20.

### 8. Underfloor/ceiling

In an underfloor/ceiling application the circuits are individually balanced according to pressure loss. This means that all circuits have the same pressure loss even though they may differ in length.

Even if the flow varies, the pressure loss will remain the same, and for this reason constant pressure is the recommended control mode.

See *Constant pressure*, page 21.

## Ground source heat pump systems (GSHP)

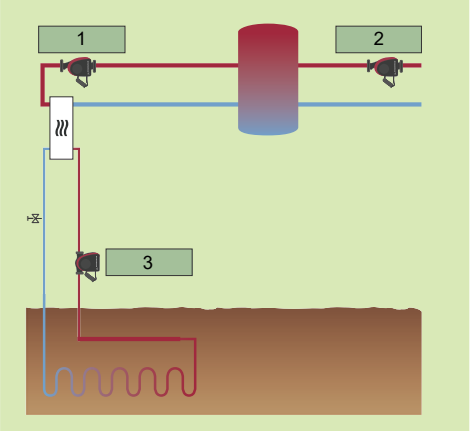


TM07 0359 1218

**Fig. 13** Ground source heat pump system in a commercial building

| Pos. | Description |
|---|---|
| 1 | Charging pump |
| 2 | Distribution side |
| 3 | Ground loop |

The following sections provide recommendations on which control mode to choose according to your application and where the pump is placed in the system.

In addition, you can use MAGNA3's built-in application wizard to help you identify which control mode is best suited your application. See *Application wizard*, page 42.

### 1. Charging pump

If the temperature in the tank falls below a certain threshold, the charging pump starts. The pump operates until the tank temperature is back up at the desired level.

As this is a closed circuit with no flow variations, constant-flow or constant-curve operation are suitable control modes.

See *Constant flow*, page 22 and *Constant curve*, page 23.

### 2. Distribution side

If the distribution pump is connected to a radiator system, proportional pressure is the optimum control mode. If underfloor heating is connected right after the pump, constant pressure is preferred.

See *Proportional pressure*, page 20, and *Constant pressure*, page 21.

### 3. Ground loop

Since the ground loop is a closed system with no variations in flow, the most suitable control modes are constant flow and constant curve.

See *Constant flow*, page 22, and *Constant curve*, page 23.

## Solar-heating systems

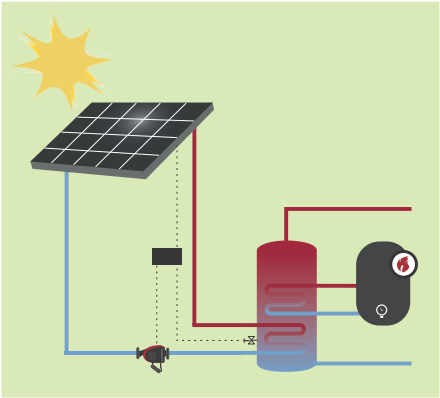

TM05 3421 1312

**Fig. 14** Functional drawing of a solar-heating system

We recommend that the main pump in a solar-heating system operates with the constant-curve control mode or as recommended by the solar system provider.

Alternative control modes, like constant temperature or differential temperature, can be viable options, but the must only be chosen based on dialogue with the solar system provider.

See *Constant curve*, page 23, *Constant temperature*, page 21, and *Differential temperature*, page 22.

# 4. Functions

| | Model A | Model B/C | Model D | Page |
|---|---|---|---|---|
| **Operating modes** | | | | 19 |
| Normal (control modes enabled) | • | • | • | 19 |
| Stop | • | • | • | 19 |
| Minimum curve | • | • | • | 19 |
| Maximum curve | • | • | • | 19 |
| **Control modes** | | | | 19 |
| $AUTO_{ADAPT}$ (factory setting) | • | • | • | 19 |
| $FLOW_{ADAPT}$ | • | • | • | 20 |
| Proportional pressure | • | • | • | 20 |
| Constant pressure | • | • | • | 21 |
| Constant temperature | • | • | • | 21 |
| Differential temperature | | • | • | 22 |
| Constant flow | | | • | 22 |
| Constant curve | • | • | • | 22 |
| **Additional control mode features** | | | | 24 |
| $FLOW_{LIMIT}$ | • | • | • | 24 |
| Automatic Night Setback | • | • | • | 24 |
| **Multipump modes** | | | | 25 |
| Alternating operation | • | • | • | 25 |
| Backup operation | • | • | • | 25 |
| Cascade operation | • | • | • | 25 |
| **Readings on the pump** | | | | 26 |
| Operating status | • | • | • | 26 |
| Pump performance | • | • | • | 26 |
| Warning and alarm | • | • | • | 26 |
| Heat energy monitor | • | • | • | 26 |
| Operating log | • | • | • | 26 |
| Grundfos Eye (status indicator) | • | • | • | 27 |
| **Communication** | | | | 27 |
| Grundfos GO Remote | • | • | • | 27 |
| Wireless GENIair connection | • | • | • | 27 |
| Pump information to BMS via CIM modules | • | • | • | 27 |
| Bus via GENIbus | • | • | • | 28 |
| Bus via LonWorks | • | • | • | 28 |
| Bus via PROFIBUS DP | • | • | • | 28 |
| Bus via Modbus RTU | • | • | • | 28 |
| Bus via BACnet MS/TP | • | • | • | 28 |
| Grundfos Remote Management | • | • | • | 30 |
| Digital inputs | • | • | • | 30 |
| Relay outputs | • | • | • | 31 |
| Analog input for external sensor | • | • | • | 31 |
| External setpoint function | • | • | • | 33 |

## Control modes: Quick overview

**AUTO$_{ADAPT}$**

- Recommended for most heating systems.
- During operation, the pump automatically makes the necessary adjustment to the actual system characteristic.

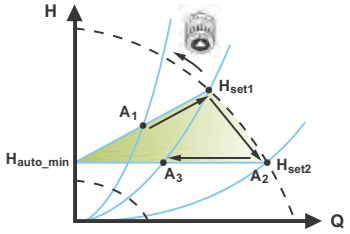


**FLOW$_{ADAPT}$**

The FLOW$_{ADAPT}$ control mode combines a control mode and a function:

- The pump is running in AUTO$_{ADAPT}$.
- The delivered flow from the pump will never exceed a selected FLOW$_{LIMIT}$.

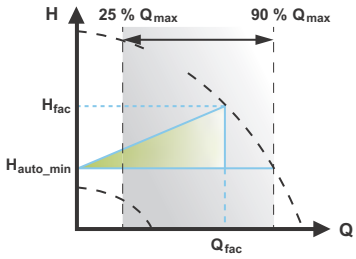


**Proportional pressure**

- Used in systems with relatively large pressure losses in the distribution pipes.
- The head of the pump will increase proportionally to the flow in the system to compensate for the large pressure losses in the distribution pipes.

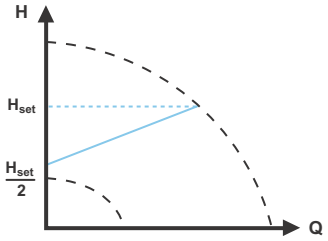


**Constant pressure**

- We recommend this control mode in systems with relatively small pressure losses.
- The pump head is kept constant, independent of the flow in the system.

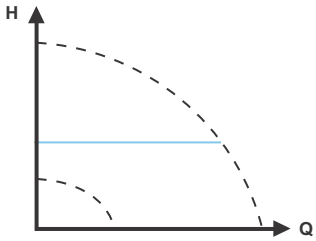


**Constant temperature**

In systems with a fixed system characteristic, for example domestic hot-water systems, the control of the pump according to a constant return-pipe temperature is relevant.

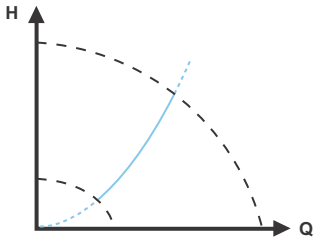


**Differential temperature**

- Ensures a constant differential temperature drop across heating and cooling systems.
- The pump will maintain a constant differential temperature between the pump and the external sensor.

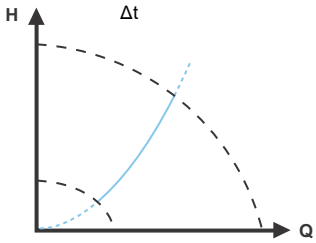

**Constant flow**

**Note:** Available for pumps with production code from 1838.

- The pump maintains a constant flow in the system independently of the head.
- It is not possible to use an external sensor, instead, the pump uses its internal sensor.

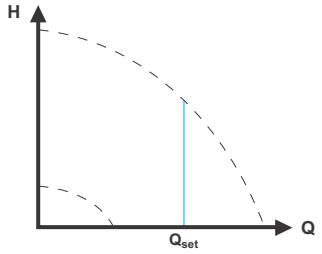


**Constant curve**

- The pump can be set to operate according to a constant curve, like an uncontrolled pump.
- Set the desired speed in % of the maximum speed in the range from minimum to 100 %.

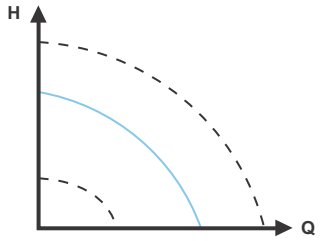


For multipump modes, see *Multipump modes*, page 25.

## Operating modes

### Normal

The pump runs according to the selected control mode.

**Note:** You can select the control mode and setpoint even if the pump is not running in Normal mode.

### Stop

The pump stops.

### Min.

You can use the minimum curve mode in periods where a minimum flow is required.

This operating mode is for instance suitable for manual night setback if automatic night setback is not desired.

The minimum curve can be adjusted by defining the pump's operating range.

### Max.

You can use the maximum curve mode in periods where a maximum flow is required.

This operating mode is for instance suitable for hot-water priority.

You can select the normal, stop, min. and max. operating modes directly by use of the built-in digital inputs. See *Connections in the control box, terminal-connected versions*, page 41.

The maximum curve can be adjusted by defining the pump's operating range.

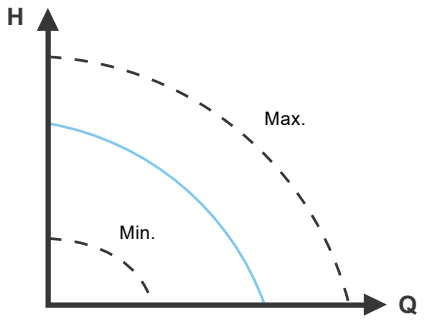


TM05 2446 5111

**Fig. 15** Maximum and minimum curves

## Control modes

### Factory setting

The pumps have been factory-set to AUTO$_{ADAPT}$ without automatic night setback, which is suitable for most installations.

The setpoint has been factory-set.

### AUTO$_{ADAPT}$

We recommend the AUTO$_{ADAPT}$ control mode for most heating systems, especially in systems with relatively large pressure losses in the distribution pipes, and in replacement situations where the proportional-pressure duty point is unknown.

This control mode has been developed specifically for heating systems and we do not recommend it for air-conditioning and cooling systems.

#### Characteristics and key benefits

- Automatically adjusts the pump to actual system characteristics.
- Ensures minimum energy consumption and a low noise level.
- Reduced operating costs and comfort increase.

#### Technical specifications

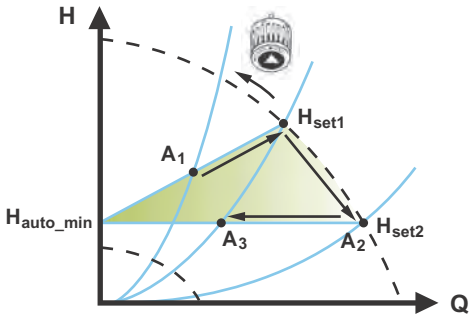


TM05 2452 1312

**Fig. 16** AUTO$_{ADAPT}$ control

| | |
|---|---|
| $A_1$: | Original duty point |
| $A_2$: | Lower registered head on the max. curve |
| $A_3$: | New duty point after AUTO$_{ADAPT}$ control |
| $H_{set1}$: | Original setpoint |
| $H_{set2}$: | New setpoint after AUTO$_{ADAPT}$ control |
| $H_{auto\_min}$: | A fixed value of 1.5 m |

The AUTO$_{ADAPT}$ control mode is a form of proportional-pressure control where the control curves have a fixed origin, $H_{auto\_min}$.

When you have enabled AUTO$_{ADAPT}$, the pump will start with the factory setting, $H_{set1}$, corresponding to approx. 55 % of its maximum head, and then adjust its performance to $A_1$. See fig. 16.

When the pump registers a lower head on the maximum curve, $A_2$, the AUTO$_{ADAPT}$ function automatically selects a correspondingly lower control curve, $H_{set2}$. If the valves in the system close, the pump adjusts its performance to $A_3$. See fig. 16.

**Note:** Manual setting of the setpoint is not possible.

## FLOW$_{ADAPT}$

The FLOW$_{ADAPT}$ control mode combines AUTO$_{ADAPT}$ and FLOW$_{LIMIT}$, meaning that the pump runs AUTO$_{ADAPT}$ while at the same time ensuring that the flow rate never exceeds the entered FLOW$_{LIMIT}$ value. This control mode is suitable for systems where a maximum flow limit is desired and where a steady flow through the boiler in a boiler system is required. Here, no extra energy is used for pumping too much liquid into the system.

In systems with mixing loops, you can use FLOW$_{ADAPT}$ to control the flow in each loop.

### Characteristics and key benefits

- The dimensioned flow for each zone (required heat energy) is determined by the flow from the pump. This flow rate can be set precisely in the FLOW$_{ADAPT}$ control mode without using throttling valves.
- When the flow rate is set lower than the balancing valve setting, the pump will ramp down instead of losing energy by pumping against a balancing valve.
- Cooling surfaces in air-conditioning systems can operate at high pressure and low flow.

**Note:** The pump cannot reduce the flow on the inlet side, but is able to control that the flow on the outlet side is at least the same as on the inlet side, as the pump has no built-in valve.

### Technical specifications

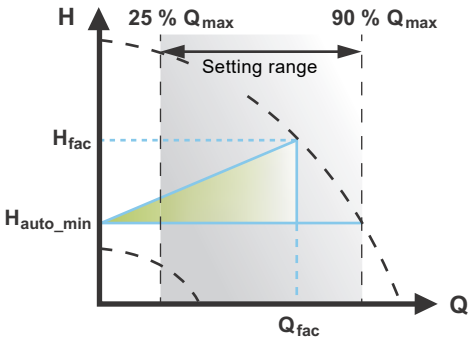


TM05 3334 1312

**Fig. 17** FLOW$_{ADAPT}$ control

The factory setting of the FLOW$_{ADAPT}$ is the flow where the AUTO$_{ADAPT}$ factory setting meets the maximum curve. See fig. 17.

The typical pump selection is based on the required flow and calculated pressure losses. The pump is typically oversized by 30 to 40 % to ensure that it can overcome the pressure losses in the system. Under these conditions, the full benefit of AUTO$_{ADAPT}$ cannot be obtained.

To adjust the maximum flow of this "oversized" pump, balancing valves are built into the circuit to increase the resistance and thus reduce the flow.

The FLOW$_{ADAPT}$ function reduces the need for a pump throttling valve, see fig. 18, but does not eliminate the need for balancing valves in heating systems.

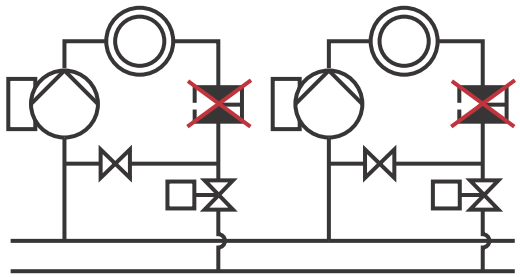

TM05 2685 1212

**Fig. 18** Reduced need for a pump throttling valve

## Proportional pressure

Proportional pressure is suitable in systems with relatively large pressure losses in the distribution pipes and in air-conditioning and cooling systems:

- Two-pipe heating systems with thermostatic valves and the following:
  - very long distribution pipes
  - strongly throttled pipe balancing valves
  - differential-pressure regulators
  - large pressure losses in the parts of the system through which the entire amount of water flows (for example boiler, heat exchanger and distribution pipe up to the first branching).
- Primary circuit pumps in systems with large pressure losses in the primary circuit.
- Air-conditioning systems with the following:
  - heat exchangers (fan coils)
  - cooling ceilings
  - cooling surfaces.

### Characteristics and key benefits

- The head of the pump increases proportionally to the flow in the system.
- Compensates for large pressure losses in the distribution pipes.

### Technical specifications

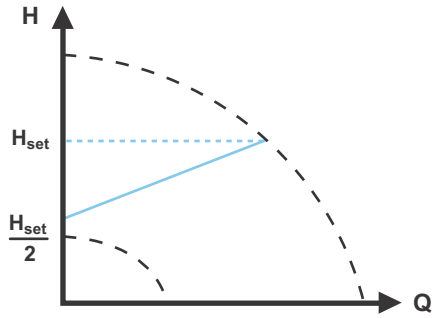


TM05 2448 1212

**Fig. 19** Proportional-pressure control

The head against a closed valve is half the setpoint $H_{set}$.

## Constant pressure

A constant pressure is advantageous in systems with relatively small pressure losses in the distribution pipes:

- Two-pipe heating systems with thermostatic valves:
  - dimensioned for natural circulation
  - small pressure losses in the parts of the system through which the entire amount of water flows (for example boiler, heat exchanger and distribution pipe up to the first branching).
  - modified to a high differential temperature between the flow pipe and the return pipe (for example district heating).
- Underfloor heating systems with thermostatic valves.
- One-pipe heating systems with thermostatic valves or pipe balancing valves.
- Primary circuit pumps in systems with small pressure losses in the primary circuit.

### Characteristics and key benefits

- The pump pressure is kept constant, independent of the flow in the system.

### Technical specifications

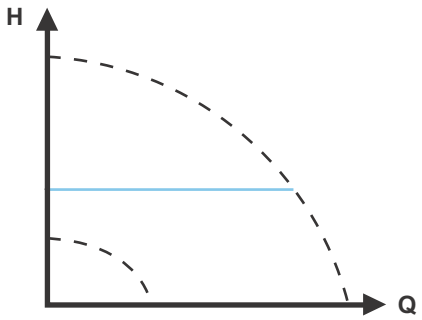


TM05 2449 0312

**Fig. 20** Constant-pressure control

## Constant temperature

This control mode is suitable in systems with a fixed system characteristic, for example domestic hot-water systems, where the control of the pump according to a constant return-pipe temperature is relevant.

The pump is from factory set to operate in a heating system with a controller gain, Kp, equal to 1. If the pump operates in a cooling system, the gain must be changed to a negative value, for example -1. This is done via the operating panel of the pump.

### Characteristics and key benefits

- The temperature is kept constant.
- $FLOW_{LIMIT}$ is used to control the maximum circulation flow.

### Technical specifications

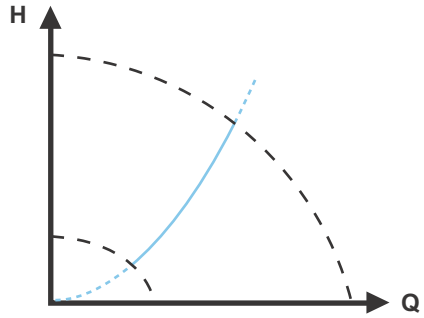


TM05 2451 5111

**Fig. 21** Constant-temperature control

The inverse control for cooling application is available from model B.

### Temperature sensor

If the pump is installed in the flow pipe, install an external temperature sensor in the return pipe of the system. See fig. 22. Install the sensor as close as possible to the consumer (radiator, heat exchanger, etc.).

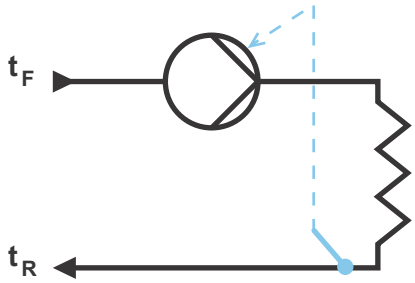


TM05 2615 0312

**Fig. 22** Pump with external sensor

If the pump is installed in the return pipe of the system, you can use the internal temperature sensor. In this case, install the pump as close as possible to the consumer (radiator, heat exchanger, etc.).

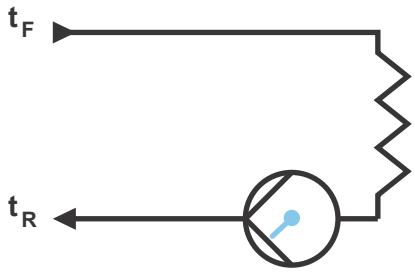


TM05 2616 0312

**Fig. 23** Pump with internal sensor

## Differential temperature

Select this control mode if the pump performance is to be controlled according to a differential temperature in the system where the pump is installed.

### Characteristics and key benefits

- Ensures a constant differential temperature drop across heating and cooling systems.
- Ensures a constant differential temperature between the pump and the external sensor, see figs 24 and 25.
- Requires two temperature sensors, the internal temperature sensor together with an external sensor.

### Technical specifications

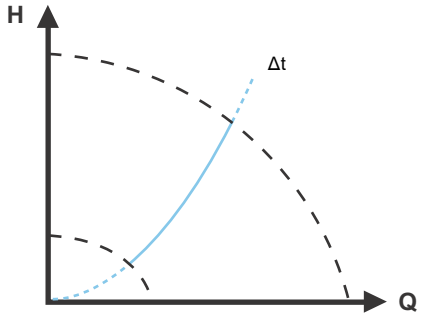


TM05 2451 5111

**Fig. 24** Differential temperature

The differential-temperature control mode is available from model B. The model version is stated on the nameplate. See *Model type*, page 5.

### Temperature sensor

To measure the temperature difference of the flow pipe and the return pipe, you must use both the internal sensor and an external sensor. If the pump is installed in the flow pipe, the external sensor must be installed in the return pipe and vice versa. Always install the sensor as close as possible to the consumer (radiator, heat exchanger, etc.). See fig. 25.

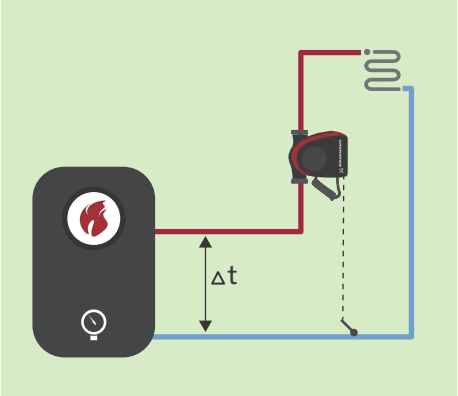


TM07 0362 1218

**Fig. 25** Differential temperature

## Constant flow

**Note:** Available for pumps with production code from 1838.

The pump maintains a constant flow in the system independently of the head. See fig. 26.

Constant flow is suitable in applications such as air handling units, hot-water systems and ground-source heating systems.

### Characteristics and key benefits

- It is not possible to use an external sensor, instead, the pump uses its internal sensor.
- In multipump systems constant flow is only available in alternating and backup operation, not cascade operation.

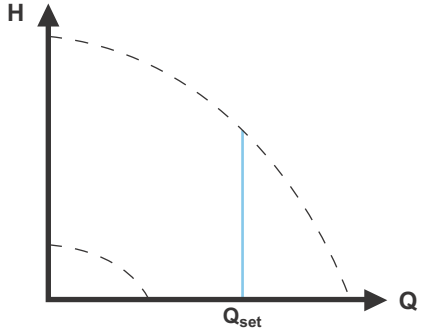


TM05 7955 1713

**Fig. 26** Constant flow rate

## Constant curve

A constant curve is suitable for systems, where both a constant flow rate and a constant head are required, i.e.:

- Heat surfaces
- cooling surfaces
- heating systems with 3-way valves
- air-conditioning system with 3-way valve
- chiller pumps

### Characteristics and key benefits

- If an external controller is installed, the pump is able to change from one constant curve to another, depending on the value of the external signal.
- Depending on your preferences, the pump can be controlled according to either a maximum or minimum curve.

### Technical specifications

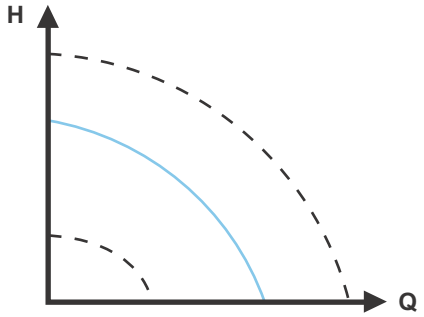


TM05 2446 5111

**Fig. 27** Constant-curve duty

The pump can be set to operate according to a constant curve, like an uncontrolled pump. See fig. 27.

Depending on the pump model, you can set the desired speed in % of the maximum speed. The span of control depends on the minimum speed, power and pressure limitation of the pump.

**Note:** If the pump speed is set in the range between minimum and maximum, the power and pressure are limited when the pump is running on the maximum curve. This means that the maximum performance can be achieved at a speed lower than 100 %. See fig. 28.

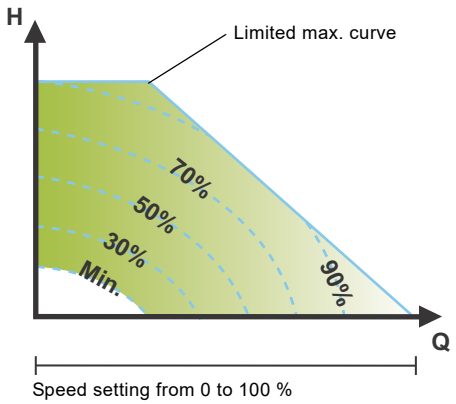


TM05 4266 2212

**Fig. 28** Power and pressure limitations influencing the maximum curve

You can also set the pump to operate according to the maximum or minimum curve, like an uncontrolled pump:

- You can use the maximum curve mode in periods where a maximum flow is required. This operating mode is for instance suitable for hot-water priority.
- You can use the minimum curve mode in periods where a minimum flow is required. This operating mode is for instance suitable for manual night setback if automatic night setback is not desired.

You can select these two operating modes via the digital inputs.

In the control mode constant curve, you can obtain a constant flow by choosing a setpoint at 100 % and choosing the desired value for the flow rate with the $FLOW_{LIMIT}$ function. Take the accuracy of the flow estimation into consideration.

## Additional control mode features

MAGNA3 offers additional features for the control modes to meet specific demands.

### FLOW$_{LIMIT}$

The feature is an integrated part of the FLOW$_{ADAPT}$ control mode, but is also advantageous in:

- proportional-pressure mode
- constant-pressure mode
- constant-temperature mode
- constant-curve mode
- differential-temperature mode.

#### Characteristics and key benefits

- A control mode feature that, when activated, ensures that the rated maximum flow is never exceeded.
- By enabling FLOW$_{LIMIT}$ in systems where MAGNA3 has full authority, the rated flow is never exceeded, thus eliminating the need for throttling valves.

#### Technical specifications

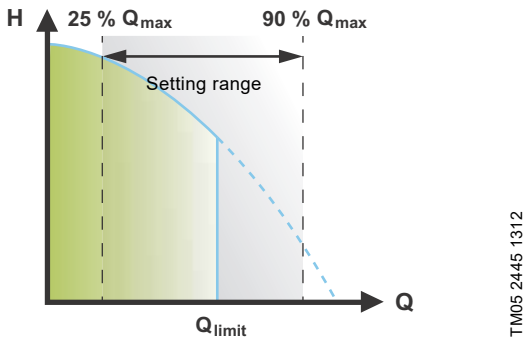


**Fig. 29** FLOW$_{LIMIT}$

The setting range for the FLOW$_{LIMIT}$ is 25 to 90 % of the $Q_{max}$ of the pump.

**Note:** Do not set the FLOW$_{LIMIT}$ lower than the dimensioned duty point.

In the flow range between 0 and $Q_{limit}$, the pump will run according to the selected control mode.

When $Q_{limit}$ is reached, the FLOW$_{LIMIT}$ function will reduce the pump speed to ensure that the flow never exceeds the FLOW$_{LIMIT}$ set, no matter if the system requires a higher flow due to an increased resistance in the system. See figs 30, 31 and 32.

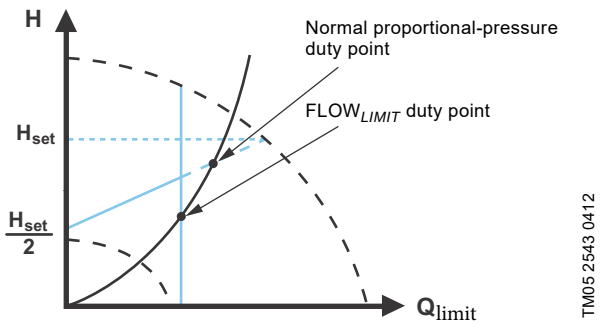


**Fig. 30** Proportional-pressure control with FLOW$_{LIMIT}$

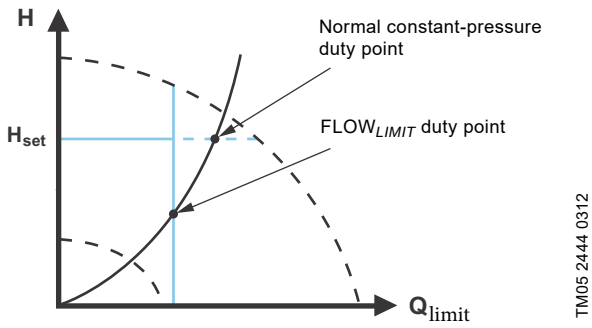


**Fig. 31** Constant-pressure control with FLOW$_{LIMIT}$

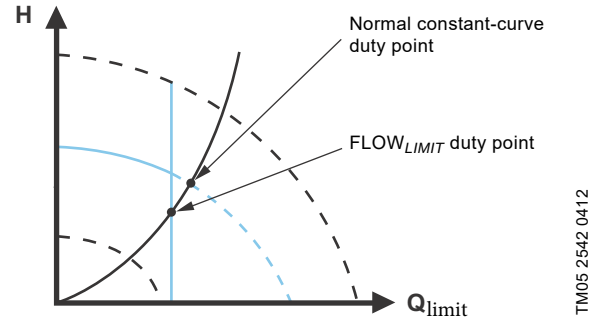


**Fig. 32** Constant curve with FLOW$_{LIMIT}$

## Automatic night setback

A night setback system is often integrated into a building management system (BMS), or as part of an equivalent electronic control system, which has a built-in timer.

The feature is not beneficial in rooms with underfloor heating because of the regulating inertia of the underfloor heating.

#### Characteristics and key benefits

- Automatic night setback lowers the room temperature at night, which reduces heating costs.
- The pump automatically changes between normal duty and night setback (duty at low demand), depending on the flow pipe temperature.
- Once activated, the pump runs on the minimum curve.

#### Technical specifications

The pump automatically changes to night setback when the built-in sensor registers a flow-pipe temperature drop of more than 10 to 15 °C within approx. two hours. The temperature drop must be at least 0.1 °C/min.

Changeover to normal duty takes place without time lag when the temperature has increased by approx. 10 °C.

**Note:** You cannot enable automatic night setback when the pump is in constant-curve mode.

# Multipump modes

## Multipump function

The multipump function enables control of single-head pumps connected in parallel and twin-head pumps without the use of external controllers. The pumps in a multipump system communicate with each other via the wireless GENIair connection.

Pump system:

- Twin-head pump.
- Two single-head pumps connected in parallel. The pumps must be of equal size and type. Each pump requires a non-return valve in series with the pump.

A multipump system is set via a selected pump, i.e. the master pump (first selected pump). The multipump functions are described in the following sections.

## Alternating operation

Only one pump is operating at a time. The change from one pump to the other depends on time or energy. If a pump fails, the other pump will take over automatically.

## Backup operation

One pump is operating continuously. The backup pump is operated at intervals to prevent seizing up. If the duty pump stops due to a fault, the backup pump will start automatically.

## Cascade operation

Cascade operation ensures that the pump performance is automatically adapted to the consumption by switching pumps on or off. The system thus runs as energy-efficiently as possible with a constant pressure and a limited number of pumps.

The slave pump starts when the master pump either runs at 90 % of the maximum speed or runs on the maximum curve.

The slave pump stops if one of the following conditions are fulfilled:

- One of the two pumps runs on minimum curve.
- One of the two pumps runs below 50 % of the maximum speed and at the same time runs below 50 % of the maximum power consumption.

Cascade operation is available in constant speed and constant pressure. You can with advantage choose a twin-head pump as the backup pump will start for a short period in peak-load situations.

All pumps in operation will run at equal speed. Pump changeover is automatic and depends on speed, operating hours and faults.

# Flow estimation accuracy

The calculated flow rate has a typical accuracy of ± 5 % of Qmax. The less flow through the pump, the less accurate the reading will be. In worst case scenarios, such as closed valve operation, the accuracy can be up to 10 % of Qmax.

See also *Heat energy monitor*, page 26.

Example:

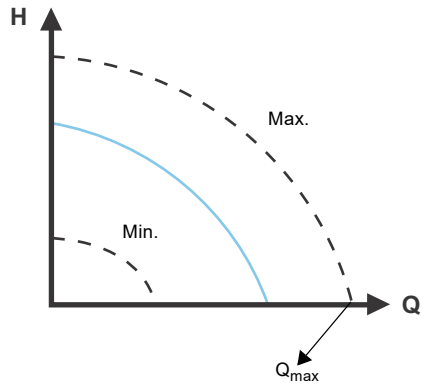


TM05 2448 5111

**Fig. 33** $Q_{max}$

1. MAGNA3 65-60 has a $Q_{max}$ of 40 $m^3/h$. A typical 5 % accuracy means 2 $m^3/h$ inaccuracy of $Q_{max}$ ± 2 $m^3/h$.
2. This accuracy is valid for the entire QH area. If the pump indicates 10 $m^3/h$, the measurement is 10 ± 2 $m^3/h$.
3. The flow rate can be 8-12 $m^3/h$.

**Note:** Use of a water/ethylene glycol mixture will decrease the accuracy.

### Low flow indication

The pump can experience low flow due to for example valves being shut. In cases where the flow is below 10 % of the maximum flow, thus too low for the pump's internal sensor to measure, it will be stated on the MAGNA3 display. A speed measurement will tell you that the pump is still running.

When the flow is high enough for the pump to measure, the MAGNA3 display returns to normal.

# Readings on the pump

## Performance overview

The "Home" menu allows you to quickly gain an overview of the main settings of up to four user-defined parameters or graphical illustration of a QH performance curve.


**Fig. 34** Example of the "Home" menu with overview of settings and performance

## Operating status and pump performance

The status menu shows the current operating mode and the selected control mode, if any. Here, you can also review the performance of the pump:

- QH graph showing current duty point, flow rate, head, power and liquid temperature.
- "Resulting setpoint" shows the setpoint set on the pump, the external influence and the resulting setpoint.
- Liquid temperature.
- Speed.
- Operating hours.

## Warning and alarm

The Warning and alarm menu provides information on:

- actual warning or alarm, if any
- information about when the warning/alarm occurred, disappeared and about corrective actions
- Warning and alarm logs.

## Heat energy monitor

Heat energy monitor is a monitoring function which makes it possible to track the heat energy distribution and consumption within a system. This prevents excessive energy costs caused by system imbalances.

The pump requires a temperature sensor in the flow pipe or the return pipe. This temperature sensor is not supplied with the pump.

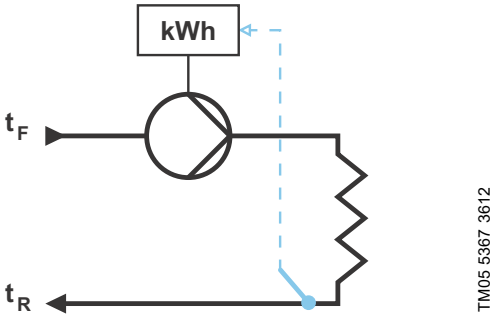


**Fig. 35** MAGNA3 with built-in heat energy monitor

**Note:** MAGNA3 incorporates a calculator for flow and media temperature, see *External Grundfos sensors*, page 132.

## Heat consumption accuracy

The built-in flow estimation needed for the calculation has a typical accuracy of ± 5 % of Qmax. The less flow through the pump, the less accurate the reading will be. In worst case scenarios, such as closed valve operation, the accuracy can be up to 10 % of Qmax. The actual accuracy in a duty point will be shown in the MAGNA3 display (this feature is available for pumps with production code from 1838).

The temperature measurement accuracy also depends on the sensor type. Therefore, you cannot use the heat energy value for billing purposes. However, the value is perfect for optimisation purposes in order to prevent excessive energy costs. See also *Flow estimation accuracy*, page 25.

To counterbalance any inaccuracy on either the internal and external sensor, it is possible to manually enter a temperature offset. The offset is entered in integers, for example 2 degrees.

**Note:** Temperature sensor offset is available for pumps with production code from 1838.

## Operating log

The Operating log is the perfect tool for pump optimisation, replacement and fault finding as it offers the following:

- All duty points and operating conditions are tracked and stored in the pump.
- The 3D work log and duty curve (over time) provide instant overviews of historical pump performance and operating conditions.

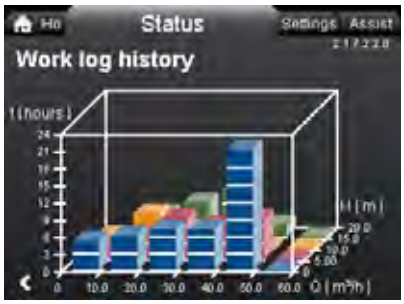


**Fig. 36** Example of Operating log

## Help and guidance

The Assist menu guides you through the setup of the pump and offers the following:

- step-by-step instructions in how to set the pump
- a short description of the six control modes and recommended applications
- assistance with fault correction
- fault advice
- multipump setup
- setup, analog input
- description of control mode.

## Grundfos Eye

Grundfos Eye at the top of the operating panel is a pump status indicator light providing information about the pump operating status.

The indicator light will flash in different sequences and provide information about the following:

- power on/off
- pump warnings
- pump alarms
- remote control
- pump running/stopped.

The function of Grundfos Eye is described in detail in the installation and operating instructions.


TM05 3810 1612

**Fig. 37** Grundfos Eye

## Communication

MAGNA3 enables communication via the following:

- wireless Grundfos GO Remote
- multipump connection via wireless GENIair
- fieldbus communication via CIM modules
- digital inputs
- relay outputs
- analog input.

## Grundfos GO Remote

With Grundfos GO Remote, you can monitor your pump, change settings, collect data and make reports. A user-friendly interface provides you with all the information and help you need, as well as live pump data monitoring and easy-to-follow tips and guides.

For further details, see*Grundfos GO Remote*, page 42 and *Grundfos GO Remote*, page 131.

## Wireless GENIair

The pump is designed for multipump connection via the wireless GENIair connection.

The built-in wireless GENIair module enables communication between pumps and with Grundfos GORemote without the use of add-on modules:

- Multipump function.
  See *Multipump function*, page 25.
- Grundfos GO Remote.
  See *Grundfos GO Remote*, page 131.

## CIM modules

TM05 3811 1612

**Fig. 38** Grundfos CIM modules

A CIM module is an add-on Communication Interface Module. The CIM module enables data transmission between the pump and an external system, for example a BMS (Building Management System) or SCADA system.

Pumps older than model C must have a CIM module mounted in both the slave and master pump. Pumps from model C have an integrated booster profile, which enables data in the slave to be monitored by the master. This booster profile supports newer versions of CIM modules, making it possible only to mount the CIM module on the master pump. See *CIM modules*, page 130, for a list of CIM modules supporting the booster profile.

The CIM module communicates via fieldbus protocols.

See *Available CIM modules*, page 28.

## Available CIM modules

| Module | Fieldbus protocol | Description | Functions |
|---|---|---|---|
| **CIM 050**  TM06 7238 3416 | GENIbus | CIM 050 is a Grundfos communication interface module used for communication with a GENIbus network. | CIM 050 has terminals for the GENIbus connection. |
| **CIM 100**  TM06 7279 3416 | LonWorks | CIM 100 is a Grundfos communication interface module used for communication with a LonWorks network. | CIM 100 has terminals for the LonWorks connection.<br>Two LEDs are used to indicate the actual status of the CIM 100 communication.<br>One LED is used for indication of correct connection to the pump, and the other is used to indicate LonWorks communication status. |
| **CIM 150**  TM06 7280 3416 | PROFIBUS DP | CIM 150 is a Grundfos communication interface module used for communication with a PROFIBUS network. | CIM 150 has terminals for the PROFIBUS DP connection.<br>DIP switches are used to set line termination.<br>Two hexadecimal rotary switches are used to set the PROFIBUS DP address.<br>Two LEDs are used to indicate the actual status of the CIM 150 communication.<br>One LED is used for indication of correct connection to the pump, and the other is used to indicate PROFIBUS communication status. |
| **CIM 200**  TM06 7281 3416 | Modbus RTU | CIM 200 is a Grundfos communication interface module used for communication with a Modbus RTU network. | CIM 200 has terminals for the Modbus connection.<br>DIP switches are used to select parity and stop bits, to select transmission speed and to set line termination.<br>Two hexadecimal rotary switches are used to set the Modbus address.<br>Two LEDs are used to indicate the actual status of the CIM 200 communication.<br>One LED is used for indication of correct connection to the pump, and the other is used to indicate Modbus communication status. |
| **CIM 260**  | EU 3G/4G cellular | CIM 260 is a Grundfos communication interface module, which communicates using Modbus TCP via cellular data transmission to a SCADA system or SMS communication to mobile phones. | CIM 260 has a SIM-card slot and an SMA connection to the cellular antenna.<br>CIM 260 can be fitted with a lithium-ion battery.<br>Two LEDs are used to indicate the actual status of the CIM 260 communication. One LED is used for indication of correct connection to the pump, and the other is used to indicate cellular communication status.<br>**Note**: The SIM card is not supplied with the CIM 260. |

| Module | Fieldbus protocol | Description | Functions |
|---|---|---|---|
| **CIM 280**<br>  | Grundfos Remote Management, 3G/4G | CIM 280 is a Grundfos communicates via cellular network to Grundfos Remote Management. | CIM 280 has a SIM-card slot and an SMA connection to the cellular antenna.<br>CIM 280 can be fitted with a lithium-ion battery.<br>Two LEDs are used to indicate the actual status of the CIM 260 communication. One LED is used for indication of correct connection to the pump, and the other is used to indicate cellular communication status.<br>**Note**: The SIM card is not supplied with the CIM 280. |
| **CIM 300**<br>  <br>TM06 7281 3416 | BACnet MS/TP | CIM 300 is a Grundfos communication interface module used for communication with a BACnet MS/TP network. | CIM 300 has terminals for the BACnet MS/TP connection.<br>DIP switches are used to set transmission speed and line termination and to select the custom Device Object Instance Number.<br>Two hexadecimal rotary switches are used to set the BACnet address.<br>Two LEDs are used to indicate the actual status of the CIM 300 communication.<br>One LED is used for indication of correct connection to the pump, and the other is used to indicate BACnet communication status. |
| **CIM 500**<br>  <br>TM06 7283 3416 | Ethernet | CIM 500 is a Grundfos communication interface module used for data transmission between an industrial Ethernet network and a Grundfos product.<br>CIM 500 supports various industrial Ethernet protocols:<br>• PROFINET<br>• Modbus TCP<br>• BACnet/IP<br>• Ethernet/IP<br>• GRM IP<br>• Grundfos iSolution Cloud (GiC). | CIM 500 supports various industrial Ethernet protocols. CIM 500 is configured via the built-in web server, using a standard web browser on a PC.<br>See the specific functional profile on the DVD-ROM supplied with the Grundfos CIM module. |

For product numbers, see *CIM modules*, page 130.

## Grundfos Remote Management

Grundfos Remote Management is an easy-to-install, low-cost solution for wireless monitoring and management of Grundfos products. GRM is based on a centrally hosted database and a web server with wireless data collection via GSM/GPRS modem. The system only requires an internet connection, a web browser, a GRM modem and an antenna as well as a contract with Grundfos allowing you to monitor and manage Grundfos pump systems.

You have wireless access to your account anywhere and anytime you have an internet connection, for example via a smartphone, tablet PC, laptop or computer. Warnings and alarms can be sent by email or SMS to your mobile phone or computer.

For information about the CIM communication interface module and GSM antennas, see *Grundfos Remote Management*, page 131.

## Digital inputs

You can use the digital input for external control of start/stop or forced maximum or minimum curve.

**Note:** If no external on/off switch is connected, maintain the jumper between the Start/Stop (S/S) and frame (⊥) terminals. This connection is the factory setting.

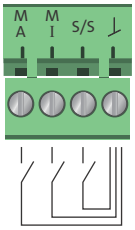


TM05 3343 1212

**Fig. 39** Digital input in control box

| Contact symbol | Function |
|---|---|
| M A | Maximum curve |
| M I | Minimum curve |
| S/S | Start/Stop |
| ⊥ | Frame connection |

### Relay recommendations for Start/Stop

To ensure a trouble-free operation, Grundfos recommends using a Solid State Relay with a minimum load current below 1 mA. These relays typically have a MOSFET transistor as output drive. Relays with gold contacts for small signal operation can also be used.

**Note:** Relays with a Thyristor output drive cannot be used.

### External start/stop

You can start and stop the pump via the digital input.

**Start/Stop**

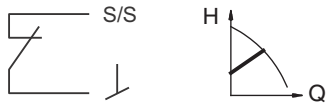


Normal duty

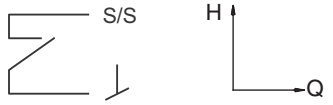


Stop

### External forced maximum or minimum curve

You can force the pump to operate on the maximum or minimum curve via the digital input.

**Maximum curve**

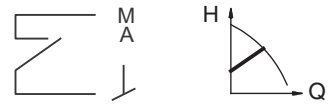


Normal duty

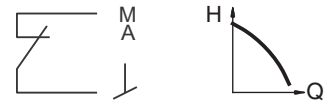


Maximum curve

**Minimum curve**

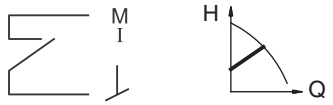


Normal duty

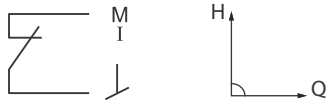


Minimum curve

## Relay outputs

The pump has two signal relays with a potential-free changeover contact for external fault indication.

You can set the function of the signal relay to Alarm, Ready or Operation on the pump operating panel or with Grundfos GO Remote.

Factory settings of relays:

| Relay | Function |
|---|---|
| 1 | Operation signal |
| 2 | Alarm signal |

**Note:** You can configure both relays to "ready, alarm or operating".

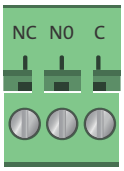


TM05 3343 1212

**Fig. 40** Relay output in control box

| Contact symbol | Function |
|---|---|
| NC | Normally closed |
| NO | Normally open |
| C | Common |

The functions of the signal relays are as shown in the table below:

| Signal relay | Alarm signal |
|---|---|
|  | Not activated:<br>• The power supply has been switched off.<br>• The pump has not registered a fault. |
|  | Activated:<br>• The pump has registered a fault. |
| **Signal relay** | **Ready signal** |
|  | Not activated:<br>• The pump has registered a fault and is unable to run. |
|  | Activated:<br>• The pump has been set to stop, but is ready to run.<br>• The pump is running. |
| **Signal relay** | **Operating signal** |
|  | Not activated:<br>• The pump is not running. |
|  | Activated:<br>• The pump is running. |

## Analog input for external sensor

To optimise pump performance, you can use the analog input for the connection of an external sensor in the following cases:

| Function/control mode | Sensor type |
|---|---|
| Heat energy monitor | Temperature sensor |
| Constant temperature | |
| Differential pressure | |
| Constant pressure | Differential-pressure transmitter |

### Controlling the flow in the system

When using an external differential-pressure sensor to control the flow in the system, you obtain the externally set pressure, which results in the following benefits:

- minimises operating costs
- prevents valve noise
- ensures comfort (adequate pressure).

When setting this function, make sure that the pump is set to run in constant-pressure mode and that "Differential-pressure control" has been activated in the "Analog input" menu on the pump's operating panel.

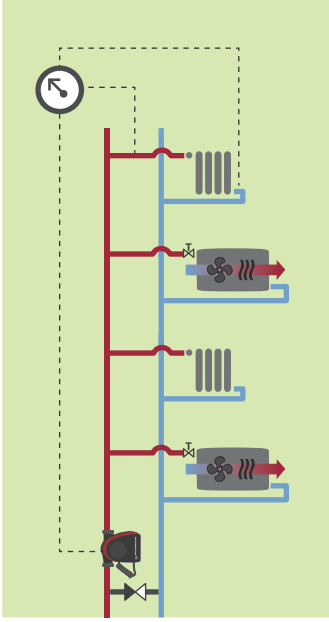

TM07 0361 1218

**Fig. 41** External differential-pressure sensor

The electrical signal for the input can be 0-10 V or 4-20 mA. You can change the selection of the electrical signal (0-10 V or 4-20 mA) on the operating panel or with Grundfos GO Remote.

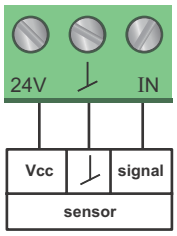


TM05 3221 1112

**Fig. 42** Analog input for external sensor or control

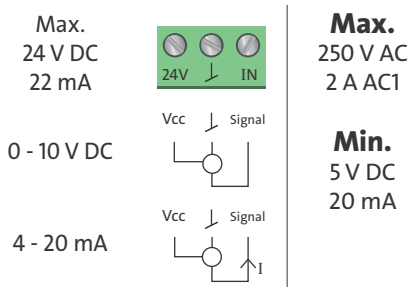


TM05 3343 2313

**Fig. 43** Wiring, analog input

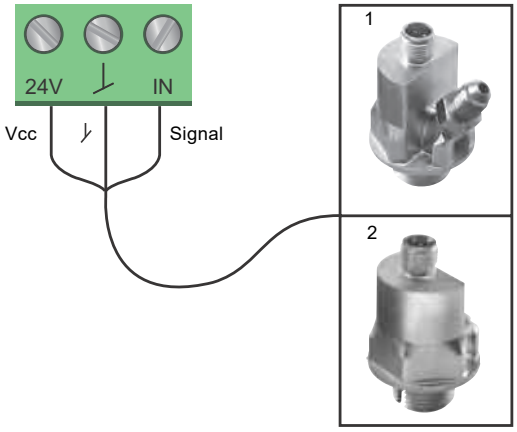


TM06 7237 3416

**Fig. 44** Examples of external sensors

| Pos. | Sensor type |
|---|---|
| 1 | Differential-pressure transmitter,<br>Grundfos type DPI V.2<br>1/2" connection and 4-20 mA signal. |
| 2 | Relative-pressure transmitter.<br>Combined temperature and pressure sensor, Grundfos type RPI T2.<br>1/2" connection and 0-10 V signal. |

For further details, see *External Grundfos sensors*, page 132.

**External control system**

The analog input can be used for an external signal for the control from a BMS system or similar control system.

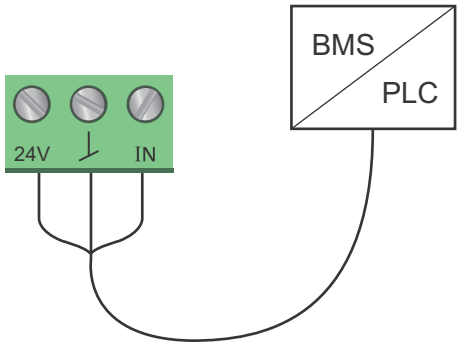


TM05 2888 0612

**Fig. 45** Example of external signal for the control via BMS or PLC

## External setpoint function

You can use the analog input to influence the setpoint externally.

The external setpoint function can be used in two different ways:

- Linear with Min.
- Linear with Stop (available for pumps with production code from 1838)

In both modes the input signal range is influenced linearly.

### Linear with Min.

Here, a 0-10 V or 4-20 mA signal controls the pump speed range in a linear function. The range of control depends on the minimum speed, power and pressure limits of the pump. See figs 46 and 47.

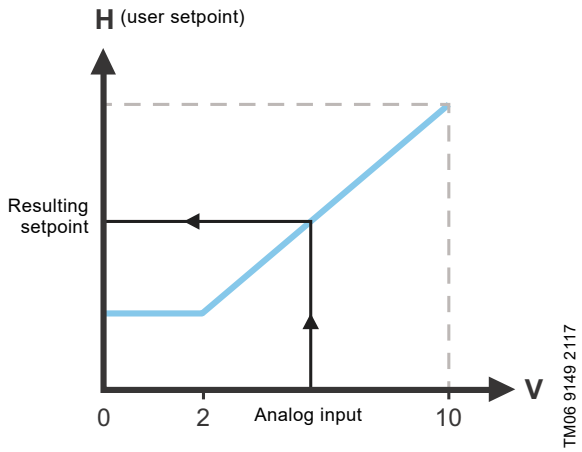


**Fig. 46** Linear with Min., 0-10 V

| Control | |
|---|---|
| 0-2 V (0-20 %) | Resulting setpoint is equal to minimum. |
| 2-10 V (20-100 %) | Resulting setpoint is between minimum and user setpoint. |

**Fig. 47** Control range and setpoint

### Linear with Stop

**Note:** Available for pumps with production code from 1838.

Here, if the input signal is below 10 %, the pump changes to operating mode "Stop". If the input signal is increased above 15 %, the operating mode is changed back to "Normal".

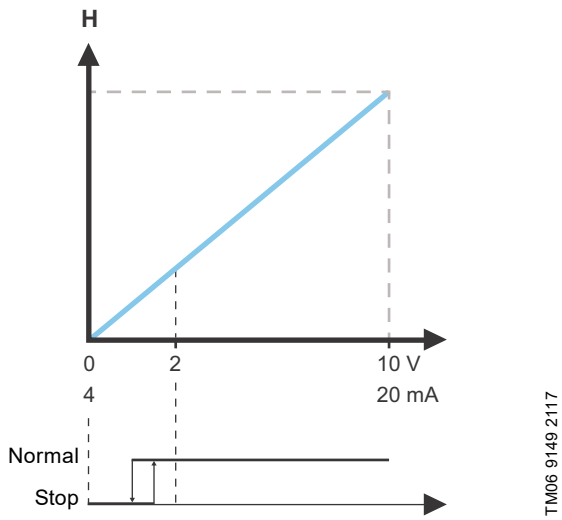


**Fig. 48** "Linear with Stop", 0-10 V

### External setpoint function according to model

The external setpoint function operates differently, depending on the model. For model A,B and C, the maximum speed is often obtained at voltages lower than 10 V as the span of control is limited.

In models newer than A,B, and C, the internal scaling has been optimised making the dynamic area bigger, thus giving a better control of the pump speed when using the external setpoint function.

The same applies if the pump is receiving a set point from Building Management Systems.

# 5. Operating conditions

## General recommendations

| | |
|---|---|
| **Water in heating systems** | Water quality according to local standards such as the German standard VDI 2035 |
| **Domestic hot water** | Degree of hardness up to 14 °dH |
| **Water containing glycol** | Maximum viscosity = 10-50 cSt ~ 50 % water / 50 % ethylene glycol at -10 °C |

### Liquid temperature

Continuously: -10 to +110 °C.

Stainless-steel pumps in domestic hot-water systems:

In domestic hot-water systems, we recommend that you keep the liquid temperature below 65 °C to eliminate the risk of lime precipitation.

### Location

The pump is designed for indoor installation.

Always install the pump in a dry environment where it will not be exposed to drops or splashes, for example water, from surrounding equipment or structures.

As the pump contains stainless-steel parts, it is important that it is not installed directly in environments, such as:

- Indoor swimming pools where the pump would be exposed to the ambient environment of the pool.
- Locations with direct and continuous exposure to a marine atmosphere.
- In rooms where hydrochloric acid (HCl) can form acidic aerosols escaping from, for example, open tanks or frequently opened or vented containers.

The above applications do not disqualify for installation of MAGNA3. However, it is important that the pump is not installed directly in these environments.

#### Cooling applications

In cooling applications condensation may occur on the surface of the pump. In certain cases it is necessary to mount a drip tray.

## Ambient conditions

| **Ambient conditions** | |
|---|---|
| Ambient temperature during operation | 0-40 °C |
| Ambient temperature during storage and transport | -40 to +70 °C |
| Relative humidity | Maximum 95 % |

Ambient temperatures below 0 °C require the following conditions:

- The media temperature is +5 °C.
- The media contains glycol.
- The pump runs continuously and does not stop.
- For twin-head pumps cascade operation every 24 h is mandatory.

### Maximum operating pressure

PN 6: 6 bar / 0.6 MPa

PN 10: 10 bar / 1.0 MPa

PN 12: 175 psi (12 bar, 1.2 MPa)

PN 16: 16 bar / 1.6 MPa.

**Note:** Not all variants are available in all markets.

### Test pressure

The pumps can withstand test pressures as indicated in EN 60335-2-51. See below.

- PN 6: 7.2 bar / 0.72 MPa
- PN 10: 12 bar / 1.2 MPa
- PN 6/10: 12 bar / 1.2 MPa
- PN 12: 12 bar / 1.2 MPa
- PN 16: 19.2 bar / 1.92 MPa.

Not all variants are available in all markets.

During normal operation, do not use the pump at higher pressures than those stated on the nameplate.

The pressure test has been made with water containing anticorrosive additives at a temperature of 20 °C.

### Minimum inlet pressure

The following relative minimum pressure must be available at the pump inlet during operation to avoid cavitation noise and damage to the pump bearings.

The values in the table below apply to single-head pumps and twin-head pumps in single-head operation.

| MAGNA3 | Liquid temperature | | |
|---|---|---|---|
| | 75 °C | 95 °C | 110 °C |
| | Inlet pressure [bar] / [MPa] | | |
| 25-40/60/80/100/120 | 0.10 / 0.01 | 0.35 / 0.035 | 1.0 / 0.10 |
| 32-40/60/80/100/120 | 0.10 / 0.01 | 0.35 / 0.035 | 1.0 / 0.10 |
| 32-40/60/80/100/120 F | 0.10 / 0.01 | 0.35 / 0.035 | 1.0 / 0.10 |
| 32-120 F | 0.10 / 0.01 | 0.20 / 0.020 | 0.7 / 0.07 |
| 40-40/60 F | 0.10 / 0.01 | 0.35 / 0.035 | 1.0 / 0.10 |
| 40-80/100/120/150/180 F | 0.10 / 0.01 | 0.50 / 0.05 | 1.0 / 0.10 |
| 50-40/60/80 F | 0.10 / 0.01 | 0.40 / 0.04 | 1.0 / 0.10 |
| 50-100/120 F | 0.10 / 0.01 | 0.50 / 0.05 | 1.0 / 0.10 |
| 50-150/180 F | 0.70 / 0.07 | 1.20 / 0.12 | 1.7 / 0.17 |
| 65-40/60/80/100/120/150 F | 0.70 / 0.07 | 1.20 / 0.12 | 1.7 / 0.17 |
| 80-40/60/80/100/120 F | 0.50 / 0.05 | 1.00 / 0.10 | 1.5 / 0.15 |
| 100-40/60/80/100/120 F | 0.70 / 0.07 | 1.20 / 0.12 | 1.7 / 0.17 |

In the case of cascade twin-head operation, increase the required relative inlet pressure by 0.1 bar / 0.01 MPa compared to the stated values for single-head pumps or twin-head pumps in single-head operation.

**Note:** The actual inlet pressure plus pump pressure against a closed valve must be lower than the maximum permissible system pressure.

The relative minimum inlet pressures apply to pumps installed up to 300 metres above sea level. For altitudes above 300 metres, increase the required relative inlet pressure by 0.1 bar / 0.01 MPa per 100 metres altitude. The MAGNA3 pump is only approved for an altitude of 2000 metres.

## Closed valve operation

MAGNA3 pumps can operate at any speed against a closed valve for several days without damage to the pump. However, Grundfos recommends you to operate at the lowest possible speed curve to minimise energy losses. There are no minimum flow requirements.

**Note:** Do not close inlet and outlet valves simultaneously, always keep one valve open when the pump is running to avoid pressure buildup. Media and ambient temperatures must never exceed the specified temperature range.

## Pumped liquids

The pump is suitable for thin, clean, non-aggressive and non-explosive liquids, not containing solid particles or fibres that may attack the pump mechanically or chemically.

In heating systems, the water must meet the requirements of accepted standards on water quality in heating systems, for example the German standard VDI 2035.

In domestic hot-water systems, we recommend that you use MAGNA3 pumps only for water with a degree of hardness lower than approx. 14 °dH.

In domestic hot-water systems, we recommend that you keep the liquid temperature below 65 °C to eliminate the risk of lime precipitation.

You can use MAGNA3 pumps for pumping water/glycol mixtures up to 50 %.

Example of a water/ethylene glycol mixture:

Maximum viscosity: 10-50 cSt ~ 50 % water / 50 % ethylene glycol mixture at -10 °C.

The pump is controlled by a power-limiting function that protects against overload.

The pumping of glycol mixtures will affect the maximum curve and reduce the performance, depending on the water/ethylene glycol mixture and the liquid temperature.

To prevent the ethylene glycol mixture from degrading, avoid temperatures exceeding the rated liquid temperature and minimise the operating time at high temperatures.

You must clean and flush the system before the ethylene glycol mixture is added.

To prevent corrosion or lime precipitation, check and maintain the ethylene glycol mixture regularly. If further dilution of the supplied ethylene glycol is required, follow the glycol supplier's instructions.

## Electrical data

| Pump type | MAGNA3 (D) |
|---|---|
| Enclosure class | IPX4D (EN 60529). |
| Insulation class | F. |
| Supply voltage | 1 x 230 V, 50/60 Hz, PE.<br>M20 cable gland (supplied with the pump). |
| Three digital inputs | External potential-free contact.<br>Contact load: 5 V, 10 mA.<br>Screened cable.<br>M16 cable gland (not supplied with the pump).<br>Loop resistance: Maximum 130 Ω. |
| Analog input | 4-20 mA (load: 150 Ω).<br>0-10 VDC (load: > 10 kΩ).<br>M16 cable gland (not supplied with the pump). |
| Two relay outputs | Internal potential-free changeover contact.<br>Maximum load: 250 V, 2 A, AC1.<br>Minimum load: 5 VDC, 20 mA.<br>Screened cable, depending on signal level.<br>M16 cable gland (not supplied with the pump). |
| Bus input | Grundfos Communication Interface Modules (add-on CIM modules) for:<br>• GENIbus<br>• LonWorks<br>• PROFIBUS DP<br>• Modbus RTU<br>• GSM/GPRS<br>• Grundfos Remote Management<br>• BACnet MS/TP<br>• Ethernet. |
| Leakage current | $I_{leakage}$ < 3.5 mA.<br>The leakage currents are measured in accordance with EN 60335-1. |
| EMC | Standards used: EN 55014-1:2006 + A1:2009 + A2:2011, EN 55014-1:2017, EN 61000-6-2:2005, EN 61000-3-3:2013, EN61000-3-2:2014. |
| Cos φ | Terminal-connected versions have a built-in active PFC (Power Factor Control) which gives a cos φ from 0.98 to 0.99, i.e. very close to 1.<br>Plug-connected versions have no PFC and therefore the power factor is from 0.50 to 0.99. |
| Consumption when the pump is stopped | 4 to 10 W, depending on activity, i.e. reading the display, use of Grundfos GO Remote, interaction with modules, etc.<br>4 W, when the pump is stopped and there is no activity. |

## Sound pressure level

The sound pressure level of the pump is dependent on the power consumption. Levels are determined in accordance with ISO 3745 and ISO 11203, method Q2.

| Pump size | Maximum [dB(A)] |
|---|---|
| 25-40/60/80/100/120<br>32-40/60/80/100/120<br>40-40/60<br>50-40 | 39 |
| 32-120 F<br>40-80/100<br>50-60/80<br>65-40/60<br>80-40 | 45 |
| 40-120/150/180<br>50-100/120/150/180<br>65-80/100/120<br>80-60/80<br>100-40/60 | 50 |
| 65-150<br>80-100/120<br>100-80/100/120 | 55 |

# 6. Construction

MAGNA3 is of the canned-rotor type, i.e. pump and motor form an integral unit without shaft seal and with only two gaskets for sealing. The bearings are lubricated by the pumped liquid.

The pump is characterised by the following:

- controller integrated in the control box
- operating panel on the control box
- control box prepared for optional CIM modules
- built-in differential-pressure and temperature sensor
- cast-iron or stainless-steel pump housing
- twin-head versions
- no external motor protection required
- insulating shells supplied with single-head pumps for heating systems.

## Motor and electronic controller

MAGNA3 incorporates a 4-pole synchronous, permanent-magnet motor (PM motor). This motor type is characterised by higher efficiency than a conventional asynchronous squirrel-cage motor.

The pump speed is controlled by an integrated frequency converter.

## Differential-pressure and temperature sensor

The differential-pressure and temperature sensor is located in the pump housing in a channel between the inlet and outlet ports.

Via a cable, the sensor sends an electrical signal for the differential pressure across the pump and for the liquid temperature to the controller in the control box.

The sensor offers substantial benefits:

- direct feedback on the pump display
- complete pump control
- measurement of the pump workload for precise and optimum control resulting in higher energy efficiency.

### Sensor specifications, temperature

| Temperature range during operation | Accuracy |
|---|---|
| -10 to +35 °C | ± 2 °C |
| +35 to +90 °C | ± 1 °C |
| +90 to +110 °C | ± 2 °C |

## Pump connections

Threaded pipe connections according to ISO 228-1.

Flange dimensions to EN 1092-2.

## Surface treatment

The pump housing and pump head are electrocoated to improve corrosion resistance.

Electrocoating includes:

- alkaline cleaning
- pretreatment with zinc phosphate coating
- cathodic electrocoating (epoxy)
- curing of paint film at 200 to 250 °C.

The pump housing of stainless-steel versions is not treated or painted and appears in blank steel. See fig. 49.

TM06 0139 4913 - TM06 0140 4913

**Fig. 49** MAGNA3 stainless steel version

## Colour

Colour codes for the pump:

| Colour | Code |
|---|---|
| Red | NCS40-50R |
| Black | NCS9000 |

## Sectional drawings

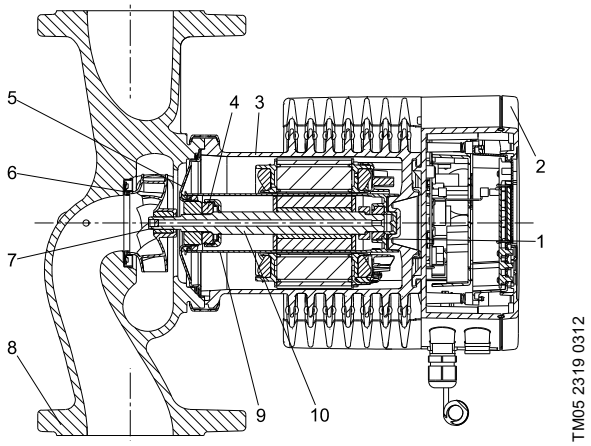


**Fig. 50** Terminal-connected version

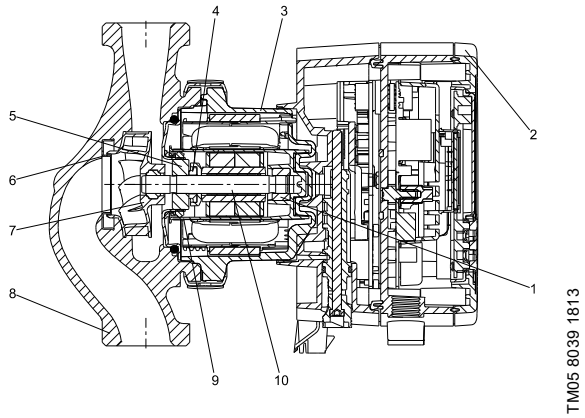


**Fig. 51** Plug-connected version

## Material specification

See figs 50 and 51.

| Pos. | Component | Material | EN |
|---|---|---|---|
| 1 | Outer bearing ring | Aluminium oxide | |
| 2 | Control box | Polycarbonate | |
| 3 | Stator housing | Aluminium | |
| | O-rings | EPDM | |
| 4 | Thrust bearing | Aluminium oxide/carbon | |
| 5 | Bearing plate | Stainless steel | EN 1.4301 |
| 6 | Neck ring | Stainless steel | EN 1.4301 |
| 7 | Impeller | PES | |
| 8 | Pump housing | Cast iron/stainless steel | EN 1561 EN-GJL-250/EN 1.4308 |
| 9 | Rotor can | PPS | |
| 10 | Shaft | Ceramic (plug-connected versions) | |
| 10 | Shaft | Stainless steel (terminal-connected versions) | EN 1.4404 |

## Sensor drawing

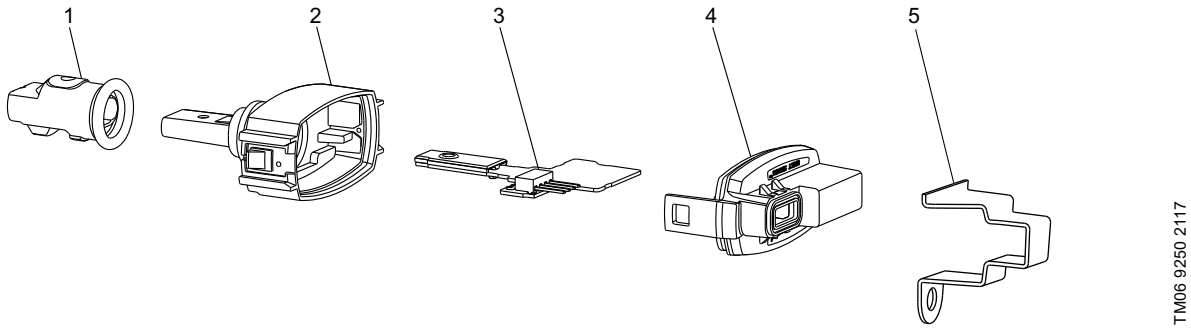


**Fig. 52** Sensor

| Pos. | Component | Material | EN |
|---|---|---|---|
| 1 | Sealing cap | EPDM | |
| 2 | Housing | PPS | |
| 3 | Printed-circuit board | - | |
| 4 | Cover snap-on | PA/TPV | |
| 5 | Bracket for sensor | Stainless steel | EN 1.4301 |

# 7. Installation

## Mechanical installation

MAGNA3 is designed for indoor installation.

You must install the pump with horizontal motor shaft.

You can install the pump in horizontal as well as vertical pipes.

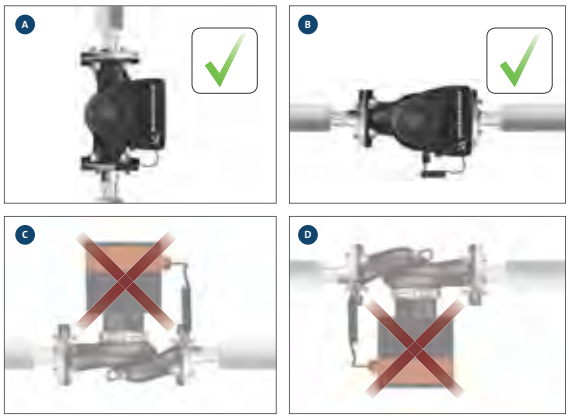


TM05 2866 3216

**Fig. 53** Installation positions

Arrows on the pump housing indicate the liquid flow direction through the pump.

The control box must be in horizontal position with the Grundfos logo in vertical position. See fig. 53.

You must install the pump in such a way that it is not stressed by the pipes.

The pump may be suspended directly in the pipes, provided that the pipes can support the pump.

Twin-head pumps are prepared for installation on a mounting bracket or base plate.

To ensure adequate cooling of motor and electronics, observe the following:

- Position the pump in such a way that sufficient cooling is ensured.
- The temperature of the ambient air must not exceed 40 °C.

### Insulating shells

The insulating shells supplied with single-head MAGNA3 pumps are for heating systems and must be fitted as part of the installation.

Insulating shells for applications with ice buildup are available as an accessory.

See *Insulating shells for applications with ice buildup*, page 130.

**Note:** Insulating shells are not available for twin-head pumps.

## Electrical installation

The electrical connection and protection must be carried out in accordance with local regulations. Persons with pacemakers disassembling this product must exercise care when handling the magnetic materials embedded in the rotor.

- The pump must be connected to an external main switch.
- The pump must always be correctly earthed.
- The pump requires no external motor protection.
- The pump incorporates thermal protection against slow overloading and blocking.
- When switched on via the power supply, the pump will start pumping after approx. 5 seconds.

**Note:** The number of starts and stops via the power supply must not exceed four times per hour.

The pump has a digital input that you can use for external control of start/stop without switching the power supply on/off.

Make the pump mains connection as shown in the diagrams on the following pages.

### Cables

Use screened cables for external on/off switch, digital input, sensor and setpoint signals.

- All cables used must be heat-resistant up to at least 70 °C.
- All cables used must be installed in accordance with EN 60204-1 and EN 50174-2.

### Additional protection

#### Plug-connected versions

In case of an insulation fault, the fault current may be a pulsating DC. Observe national legislation about requirements for and selection of Residual Current Device (RCD) when installing the pump.

#### Terminal-connected versions

For terminal-connected versions, in case of an insulation fault, the fault current may be a DC or pulsating DC. Observe national legislation about requirements for and selection of Residual Current Device (RCD) when installing the pump.

# Examples of connections

### Connection to power supply, plug-connected versions

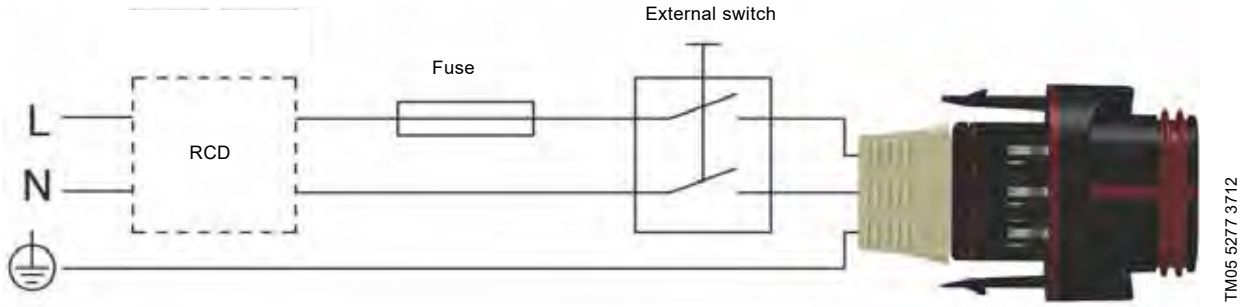


**Fig. 54** Example of plug-connected motor with main switch, backup fuse and additional protection

### Connection to external controllers, plug-connected versions

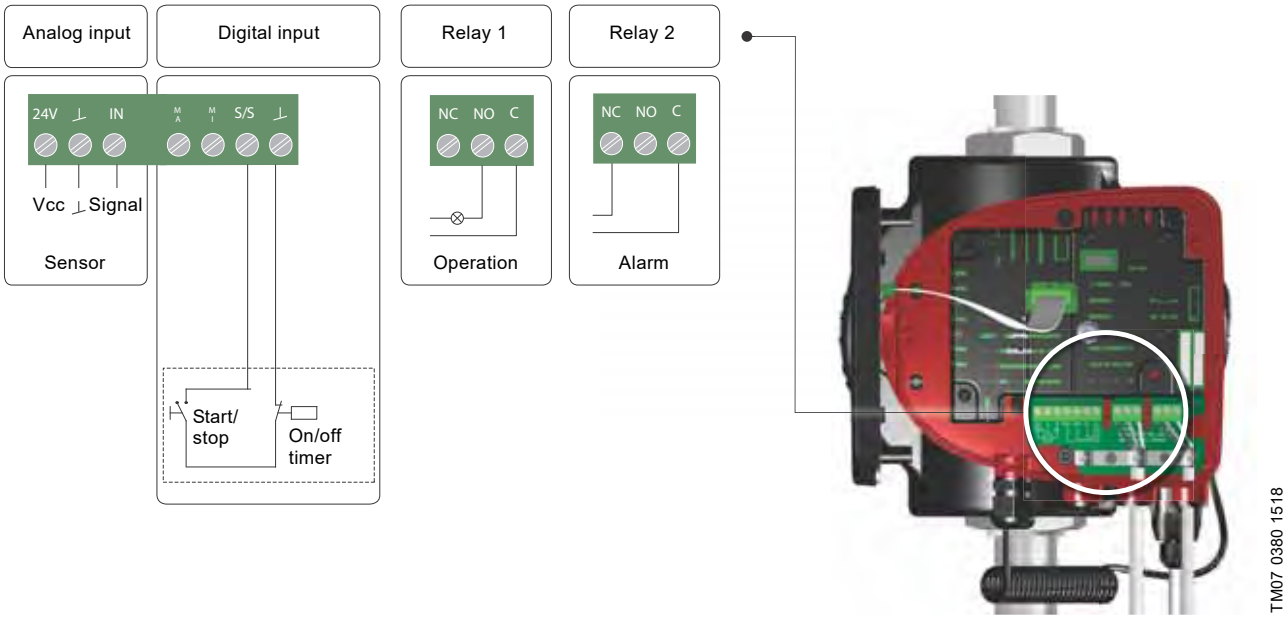


**Fig. 55** Example of connections in the control box of plug-connected versions

**Note:** Use C and NC for fault signals as this enables serial connections of more relays and detection of signal cable defects.

The connection terminals of plug-connected versions (fig. 55) differ from those of terminal-connected versions (fig. 56), but they have the same function and connection options.

### Connections in the control box, terminal-connected versions

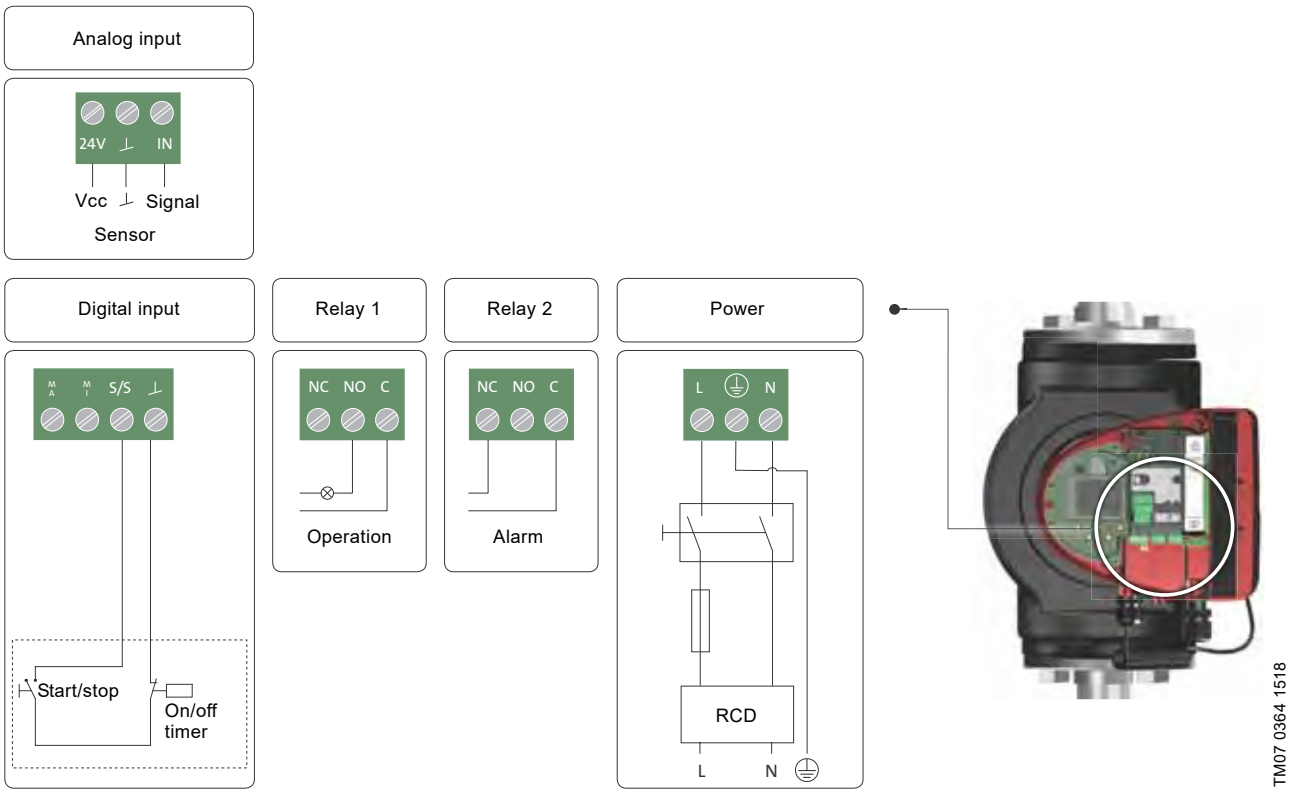


**Fig. 56** Example of connections in the control box of terminal-connected versions

**Note:** Use C and NC for fault signals as this enables serial connections of more relays and detection of signal cable defects.

For further information on digital and analog inputs, see *Digital inputs*, page 30, and *Analog input for external sensor*, page 31.

For information on relay outputs, see *Relay outputs*, page 31.

# 8. Operating the product

MAGNA3 can be operated and monitored via the operating panel on the pump and via the Grundfos GO Remote app.

## Operating panel

The MAGNA3 pump range allows you to set the pump directly on the user-friendly, 4" TFT operating panel with self-explanatory push-buttons made of high-quality silicone for precise navigation.

The operating panel gives quick and easy access to pump and performance data on site. The menu includes all available MAGNA3 pump settings, such as control mode, setpoint, relay output and bus communication.

### Startup guide and assistance

When you start the pump for the first time, you are presented with a startup guide enabling easy setting of the pump. Additionally, the "Assist" menu, including the application wizard, guides you through the various settings of the pump.


TM05 3820 1612

**Fig. 57** Operating panel, startup guide

### Application wizard

The application wizard helps you to set the correct control mode according to your application. The wizard can be accessed via the startup guide and the "Assist" menu.

Starting with the overall application type, e.g. radiator, and then specifying the system setup step by step, the wizard identifies the best suited control mode and, if necessary, helps you set the duty point.

The Display menu overview booklet provided with the pump includes application overviews such as the ones shown in *3. System applications*. Using these, you can quickly identify the pump in your system and apply this knowledge directly to the wizard on the pump.


TM07 1487 4818

## Grundfos GO Remote

The pump communicates wirelessly with Grundfos GO Remote, which allows you to:

- read operating data such as flow rate, liquid temperature and energy consumption
- read out warnings and alarms
- set the control mode and setpoint
- select external setpoint signal
- select function for digital input
- set up multipump systems
- allocate the pump number making it possible to distinguish between pumps that are connected via Grundfos GENIbus
- generate pdf reports with operating data, pump setup and warnings and alarms history.

Furthermore, Grundfos GO Remote includes assisted pump setup and assisted fault advice.

TM05 3825 2017

**Fig. 58** Connecting the pump to Grundfos GO Remote

# 9. Curve conditions

## Performance curves

The guidelines below apply to the performance curves on pages 46 to 129:

- Test liquid: airless water.
- The curves apply to a density of ρ = 983.2 kg/m$^3$ and a liquid temperature of 60 °C.
- All curves show average values. If a specific minimum performance is required, individual measurements must be made.
- The curves apply to a kinematic viscosity of μ = 0.474 mm$^2$/s (0.474 cSt).
- Reference supply voltage: 1 x 230 V, 50 Hz.
- EEI obtained according to EN 16297.

**Note:** Within the MAGNA3 performance range, you can set the constant- and proportional-pressure curves in steps of 0.1 m head on the operating panel or with Grundfos GO Remote.

## Energy efficiency index (EEI)

MAGNA3 is energy-optimised and complies with the EuP Directive (Commission Regulation (EC) No 641/2009) which has been effective as from 1 January 2013.

For MAGNA3 single-head pumps, the average energy efficiency index (EEI) is 0.18 with values down to 0.17, categorised as best in class.

MAGNA3 with its AUTO$_{ADAPT}$ function is the preferred choice for large heating systems and a true efficiency frontrunner.

Figure 59 shows the energy consumption index for a typical circulator pump compared to the various EEI limits.

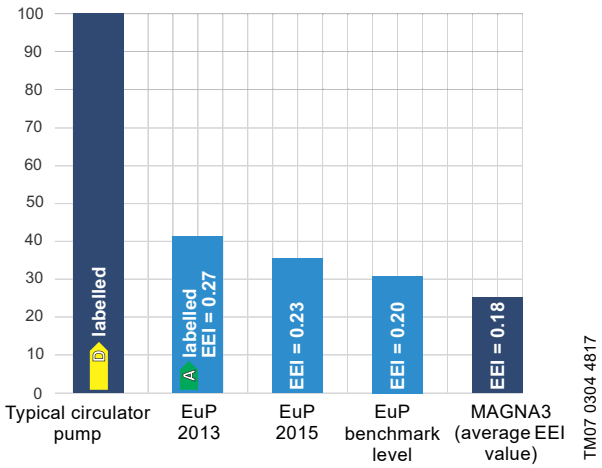


**Fig. 59** Energy consumption index, single-head pumps

With an energy efficiency index (EEI) well below the EuP benchmark level, you can achieve energy savings of up to 75 % compared to a typical circulator pump and thus a remarkably fast return on investment.

## QR code on pump nameplate


**Fig. 60** QR code on pump nameplate

With Grundfos GO Remote or a smartphone, you get the following information about MAGNA3:

- product photo
- pump performance curves
- dimensional sketches
- wiring diagram
- quotation text
- technical data
- service parts list
- PDF files, such as data booklet and installation and operating instructions.

## Markings and approvals

The following marks are available after positive testing of MAGNA3:

| Mark | Description |
|---|---|
| CE | The CE marking is based on the declaration of conformity issued by the manufacturer who certifies that the product meets all the appropriate provisions of the relevant legislation implementing certain European Directives. |
| VDE | Electro-technical products including products according to the Product Safety Act (ProgSG) and medical products according to the Medical Product Act (MPG) according to German VDE/EN/IEC standards, other technical specifications as well as possible provisions of law with respect to safety and health requirements. |
| EAC | Mark of Conformity in the Russia, Kazakhstan, Armenia, Kyrgyzstan and Belarus Customs Union for imports of Machinery and Industrial Equipment. |
| WRAS APPROVED PRODUCT | The product complies with the requirements of the United Kingdom Water Supply (Water Fittings) Regulations/Scottish Water Byelaws. Applies to the stainless-steel version only. |
| TSE | The Turkish Standards Institute (TSE) certified that this product complies with the relevant directives and standards. |
| ACS | ACS - Attestation de Conformité Sanitaire. The suitability of this product to come into contact with water destined for human consumption has been evaluated and approved by a laboratory accredited by the French Ministry of Health. |
| | Crossed-out wheeled bin according to EN 50419:2006. The crossed-out wheelie bin symbol on a product means that it must be disposed of separately from household waste. When a product marked with this symbol reaches its end of life, take it to a collection point designated by the local waste disposal authorities. The separate collection and recycling of such products will help protect the environment and human health. |

# 10. Performance curves and technical data

## Conversion table

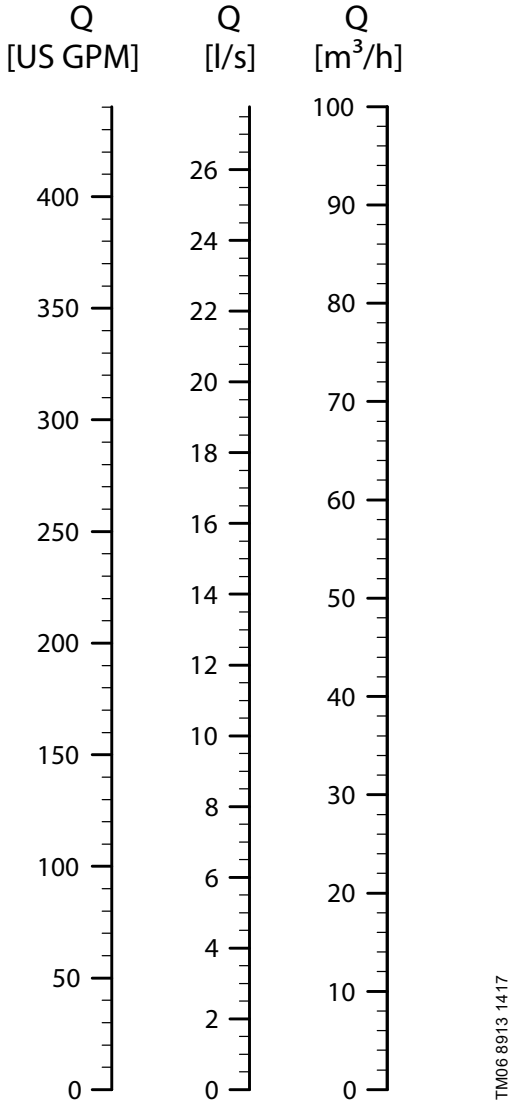

## MAGNA3 25-40 (N)

**1 x 230 V, 50/60 Hz**

Proportional pressure

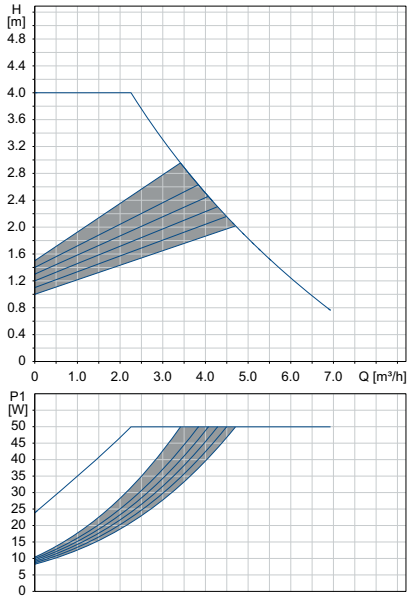


Constant pressure

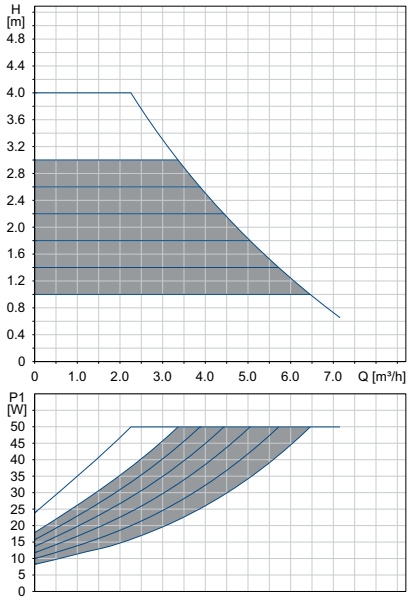


0-10 volt*

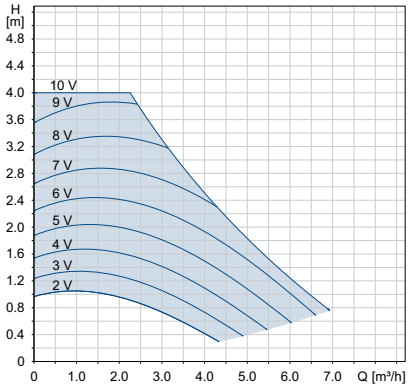


| Speed | P1 [W] | $I_1$ [A] |
|---|---|---|
| **Min.** | 9 | 0.09 |
| **Max.** | 50 | 0.46 |

The pump incorporates overload protection.

| Net weights [kg] | Gross weights [kg] | Ship. vol. [dm³] |
|---|---|---|
| 4.8 | 5.3 | 14.64 |

* External setpoint influence shown with a set point of $H_{max}$

| | |
|---|---|
| Connections: | See *Pipe connections*, page 134. |
| System pressure: | Max. 1.0 MPa (10 bar).<br>Also available as max. 1.6 MPa (16 bar). |
| Liquid temperature: | -10 to +110 °C (TF 110). |
| Also available with: | Stainless-steel pump housing, type N. |
| Specific EEI: | 0.18. |

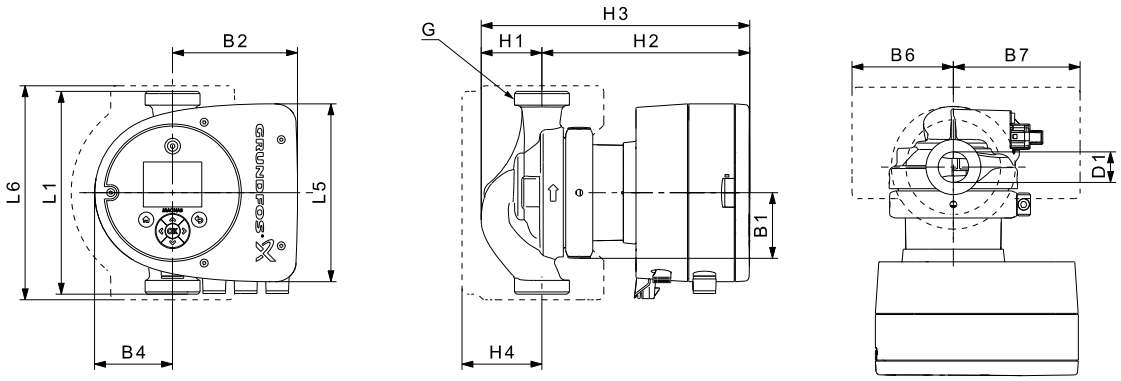


| Pump type | Dimensions [mm] | | | | | | | | | | | | | [inch] |
|---|---|---|---|---|---|---|---|---|---|---|---|---|---|---|
| | L1 | L5 | L6 | B1 | B2 | B4 | B6 | B7 | H1 | H2 | H3 | H4 | D1 | G |
| MAGNA3 25-40 (N) | 180 | 158 | 190 | 58 | 111 | 69 | 90 | 113 | 54 | 185 | 239 | 71 | 25 | 1 1/2 |

For product numbers, see page 139.

## MAGNA3 25-60 (N)

## 1 x 230 V, 50/60 Hz

Proportional pressure

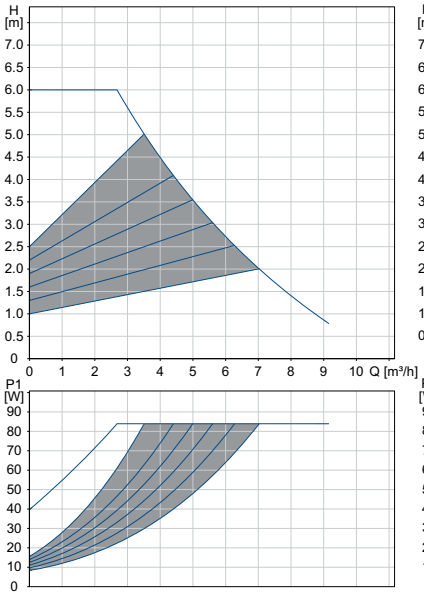


Constant pressure

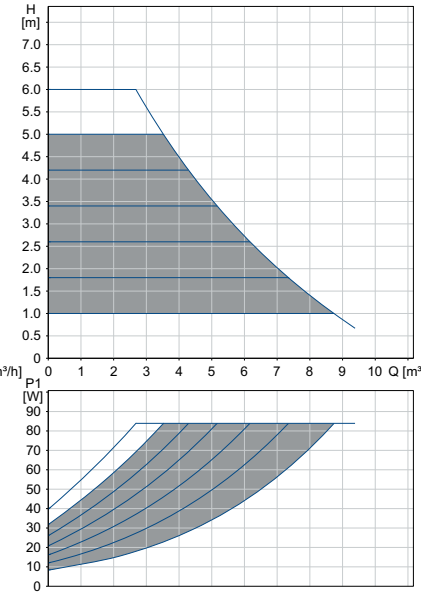


0-10 volt*

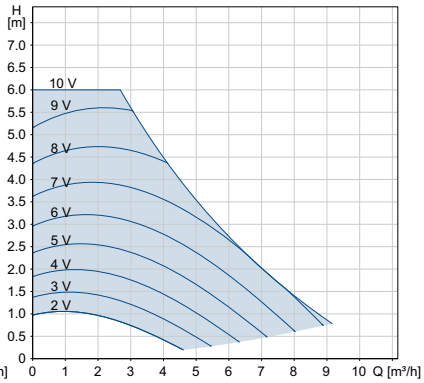


| Speed | P1 [W] | $I_1$ [A] |
|---|---|---|
| **Min.** | 9 | 0.09 |
| **Max.** | 84 | 0.75 |

The pump incorporates overload protection.

| Net weights [kg] | Gross weights [kg] | Ship. vol. [$m^3$] |
|---|---|---|
| 4.8 | 5.3 | 0.01 |

* External setpoint influence shown with a set point of $H_{max}$

| | |
|---|---|
| Connections: | See *Pipe connections*, page 134. |
| System pressure: | Max. 1.0 MPa (10 bar).<br>Also available as max. 1.6 MPa (16 bar). |
| Liquid temperature: | -10 to +110 °C (TF 110). |
| Also available with: | Stainless-steel pump housing, type N. |
| Specific EEI: | 0.18. |

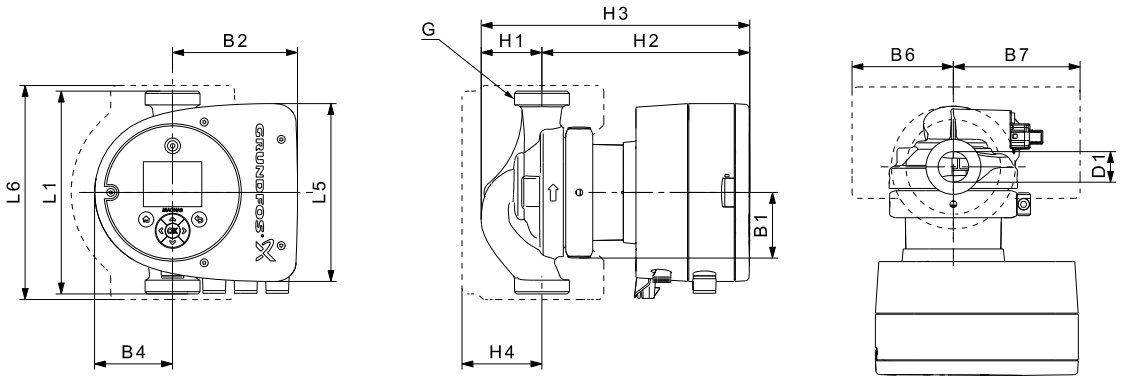


| Pump type | Dimensions [mm] | | | | | | | | | | | | | [inch] |
|---|---|---|---|---|---|---|---|---|---|---|---|---|---|---|
| | L1 | L5 | L6 | B1 | B2 | B4 | B6 | B7 | H1 | H2 | H3 | H4 | D1 | G |
| MAGNA3 25-60 (N) | 180 | 158 | 190 | 58 | 111 | 69 | 90 | 113 | 54 | 185 | 239 | 71 | 25 | 1 1/2 |

For product numbers, see page 139.

## MAGNA3 25-80 (N)

**1 x 230 V, 50/60 Hz**

Proportional pressure

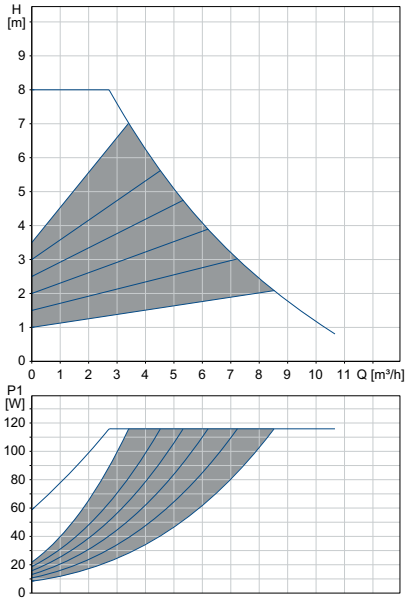


Constant pressure

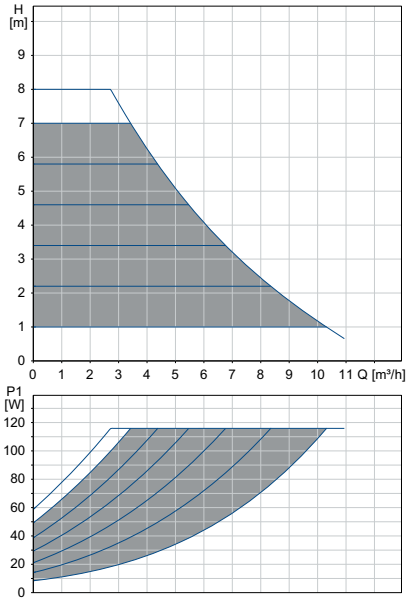


0-10 volt*

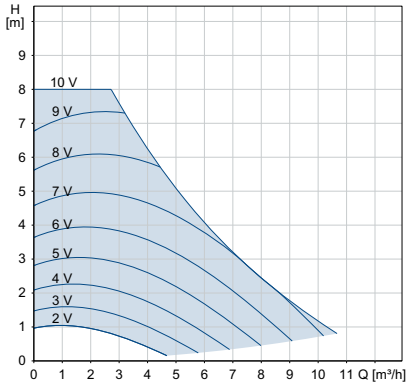


| Speed | P1 [W] | $I_1$ [A] |
|---|---|---|
| **Min.** | 9 | 0.09 |
| **Max.** | 116 | 1.02 |

The pump incorporates overload protection.

| Net weights [kg] | Gross weights [kg] | Ship. vol. [m³] |
|---|---|---|
| 4.8 | 5.3 | 0.01 |

* External setpoint influence shown with a set point of $H_{max}$

Connections: See *Pipe connections*, page 134.

System pressure: Max. 1.0 MPa (10 bar). Also available as max. 1.6 MPa (16 bar).

Liquid temperature: -10 to +110 °C (TF 110).

Also available with: Stainless-steel pump housing, type N.

Specific EEI: 0.18.

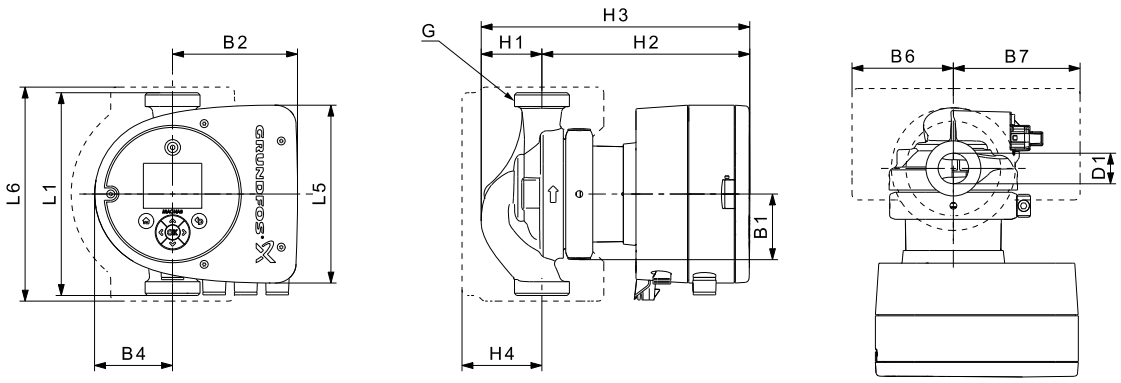


| Pump type | Dimensions [mm] | | | | | | | | | | | | | [inch] |
|---|---|---|---|---|---|---|---|---|---|---|---|---|---|---|
| | L1 | L5 | L6 | B1 | B2 | B4 | B6 | B7 | H1 | H2 | H3 | H4 | D1 | G |
| MAGNA3 25-80 (N) | 180 | 158 | 190 | 58 | 111 | 69 | 90 | 113 | 54 | 185 | 239 | 71 | 25 | 1 1/2 |

For product numbers, see page 139.

## MAGNA3 25-100 (N)

## 1 x 230 V, 50/60 Hz

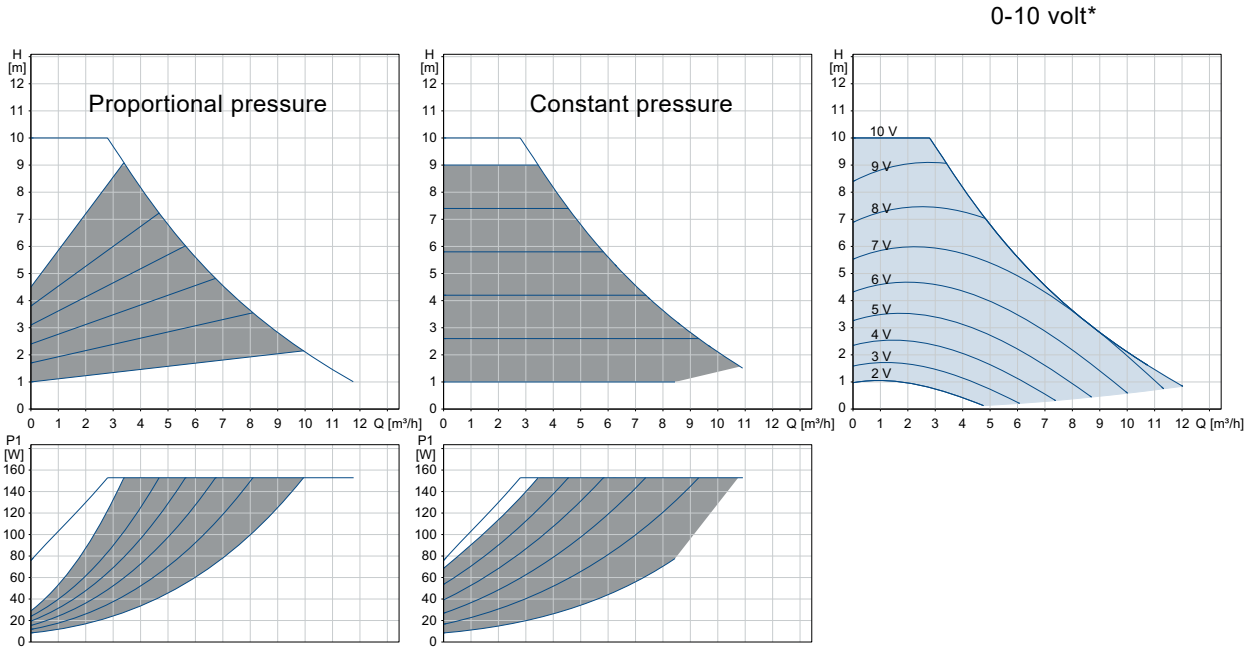


| Speed | P1 [W] | $I_1$ [A] |
|---|---|---|
| **Min.** | 9 | 0.09 |
| **Max.** | 153 | 1.33 |

The pump incorporates overload protection.

| Net weights [kg] | Gross weights [kg] | Ship. vol. [m³] |
|---|---|---|
| 4.8 | 5.3 | 0.01 |

* External setpoint influence shown with a set point of $H_{max}$

| | |
|---|---|
| Connections: | See *Pipe connections*, page 134. |
| System pressure: | Max. 1.0 MPa (10 bar).<br>Also available as max. 1.6 MPa (16 bar). |
| Liquid temperature: | -10 to +110 °C (TF 110). |
| Also available with: | Stainless-steel pump housing, type N. |
| Specific EEI: | 0.18. |

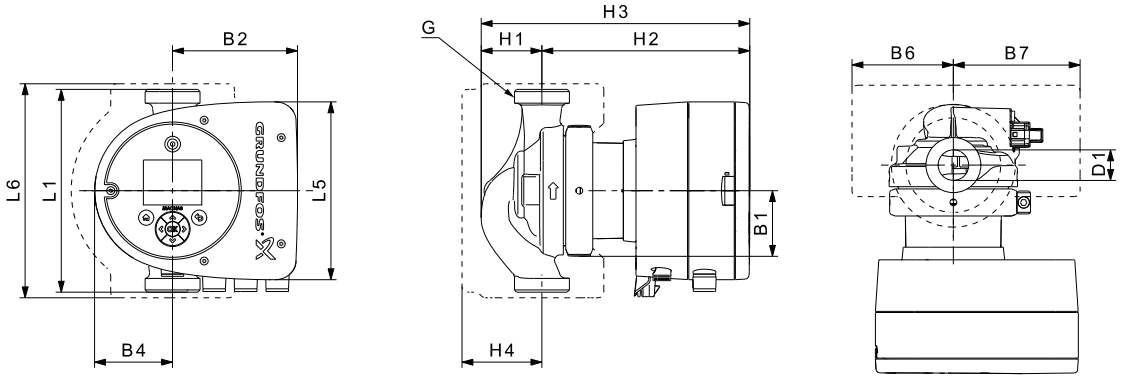


| Pump type | Dimensions [mm] | | | | | | | | | | | | | [inch] |
|---|---|---|---|---|---|---|---|---|---|---|---|---|---|---|
| | L1 | L5 | L6 | B1 | B2 | B4 | B6 | B7 | H1 | H2 | H3 | H4 | D1 | G |
| MAGNA3 25-100 (N) | 180 | 158 | 190 | 58 | 111 | 69 | 90 | 113 | 54 | 185 | 239 | 71 | 25 | 1 1/2 |

For product numbers, see page 139.

## MAGNA3 25-120 (N)

**1 x 230 V, 50/60 Hz**

Proportional pressure | Constant pressure | 0-10 volt*

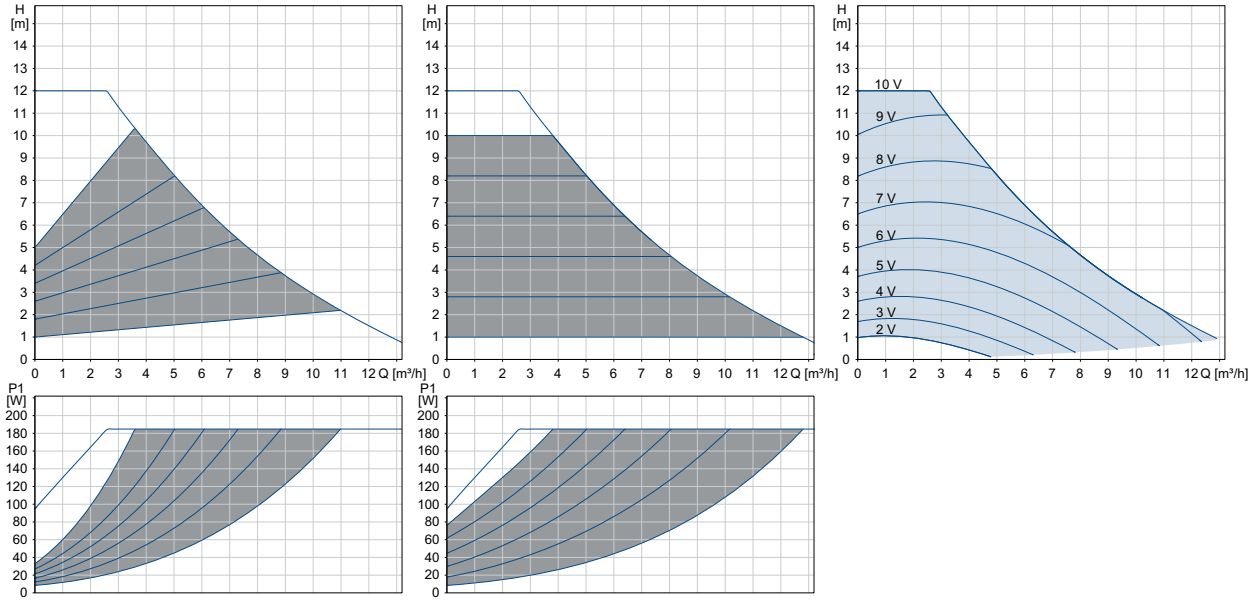


| Speed | P1 [W] | $I_1$ [A] |
|---|---|---|
| **Min.** | 9 | 0.09 |
| **Max.** | 185 | 1.56 |

The pump incorporates overload protection.

| Net weights [kg] | Gross weights [kg] | Ship. vol. [m³] |
|---|---|---|
| 4.8 | 5.3 | 0.01 |

* External setpoint influence shown with a set point of $H_{max}$

Connections: See *Pipe connections*, page 134.

System pressure: Max. 1.0 MPa (10 bar).
Also available as max. 1.6 MPa (16 bar).

Liquid temperature: -10 to +110 °C (TF 110).

Also available with: Stainless-steel pump housing, type N.

Specific EEI: 0.18.

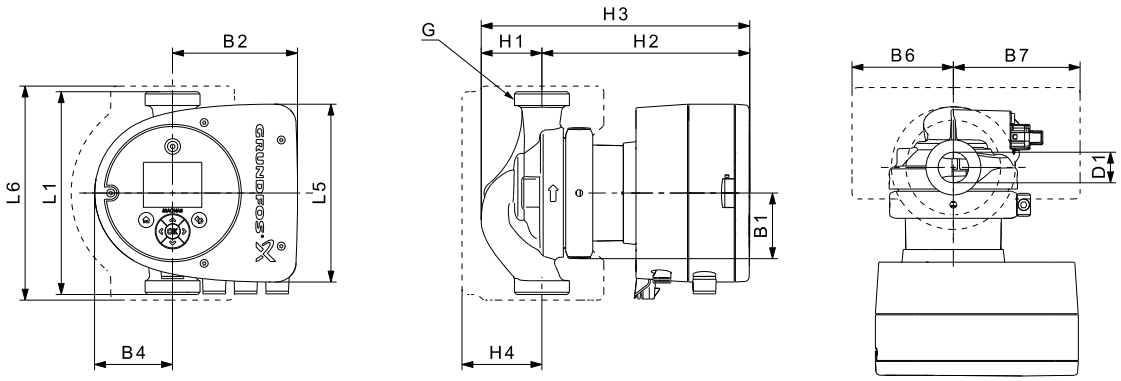


| Pump type | Dimensions [mm] | | | | | | | | | | | | | [inch] |
|---|---|---|---|---|---|---|---|---|---|---|---|---|---|---|
| | L1 | L5 | L6 | B1 | B2 | B4 | B6 | B7 | H1 | H2 | H3 | H4 | D1 | G |
| MAGNA3 25-120 (N) | 180 | 158 | 190 | 58 | 111 | 69 | 90 | 113 | 54 | 185 | 239 | 71 | 25 | 1 1/2 |

For product numbers, see page 139.

## MAGNA3 32-40 (N)

## 1 x 230 V, 50/60 Hz

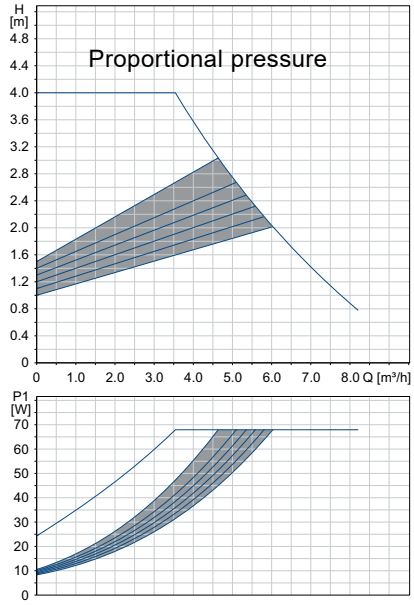


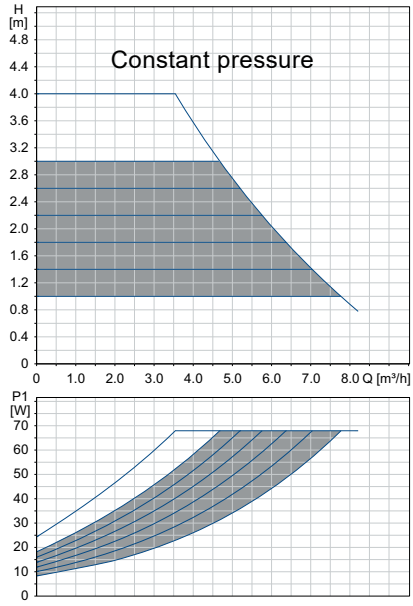


0-10 volt*

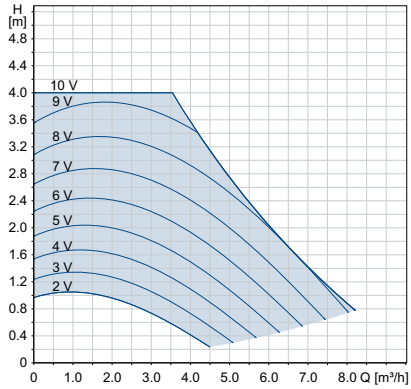


| Speed | P1 [W] | $I_1$ [A] |
|---|---|---|
| **Min.** | 9 | 0.09 |
| **Max.** | 68 | 0.61 |

The pump incorporates overload protection.

| Net weights [kg] | Gross weights [kg] | Ship. vol. [m³] |
|---|---|---|
| 4.8 | 5.3 | 0.01 |

* External setpoint influence shown with a set point of $H_{max}$

Connections: See *Pipe connections*, page 134.

System pressure: Max. 1.0 MPa (10 bar).
Also available as max. 1.6 MPa (16 bar).

Liquid temperature: -10 to +110 °C (TF 110).

Also available with: Stainless-steel pump housing, type N.

Specific EEI: 0.18.

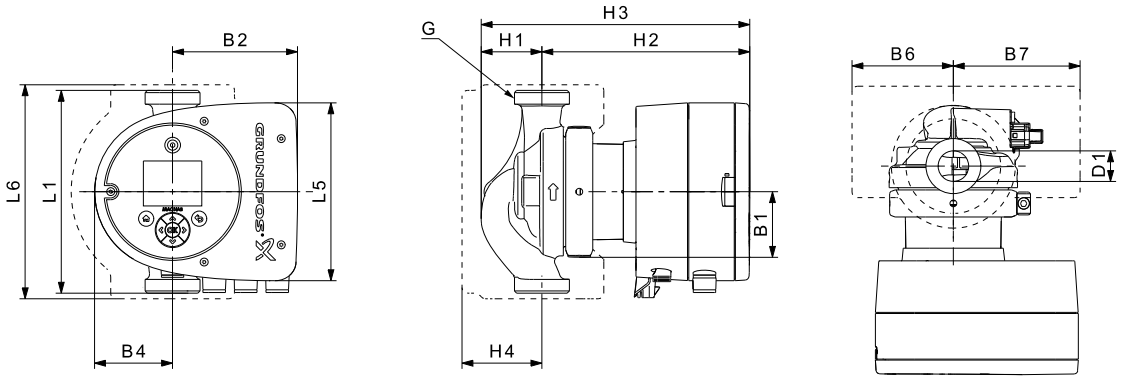


| Pump type | Dimensions [mm] | | | | | | | | | | | | | [inch] |
|---|---|---|---|---|---|---|---|---|---|---|---|---|---|---|
| | L1 | L5 | L6 | B1 | B2 | B4 | B6 | B7 | H1 | H2 | H3 | H4 | D1 | G |
| MAGNA3 32-40 (N) | 180 | 158 | 190 | 58 | 111 | 69 | 90 | 113 | 54 | 185 | 239 | 71 | 32 | 2 |

For product numbers, see page 139.

## MAGNA3 D 32-40 — 1 x 230 V, 50/60 Hz

Proportional pressure

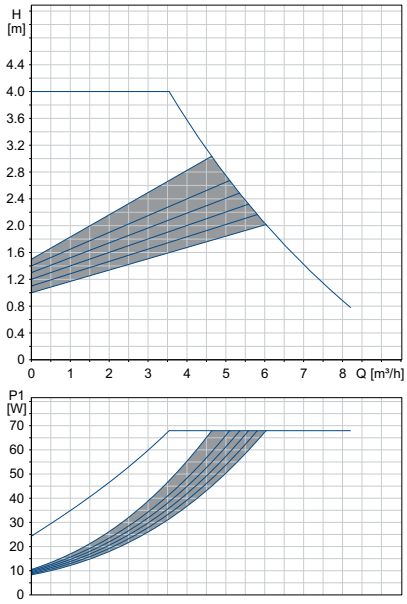


Constant pressure

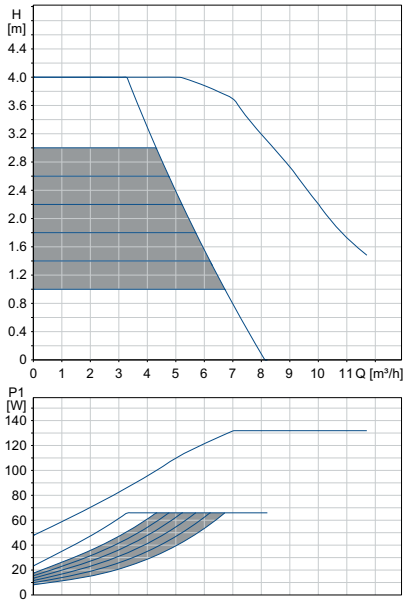


0-10 volt*

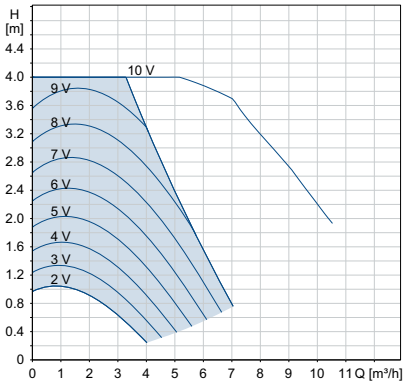


| Speed | P1 [W] | $I_1$ [A] |
|---|---|---|
| **Min.** | 9 | 0.09 |
| **Max.** | 66 | 0.61 |

The pump incorporates overload protection.

| Net weights [kg] | Gross weights [kg] | Ship. vol. [m³] |
|---|---|---|
| 13.2 | 14.0 | 0.04 |

* External setpoint influence shown with a set point of $H_{max}$

Connections: See *Pipe connections*, page 134.

System pressure: Max. 1.0 MPa (10 bar). Also available as max. 1.6 MPa (16 bar).

Liquid temperature: -10 to +110 °C (TF 110).

Specific EEI: 0.19.

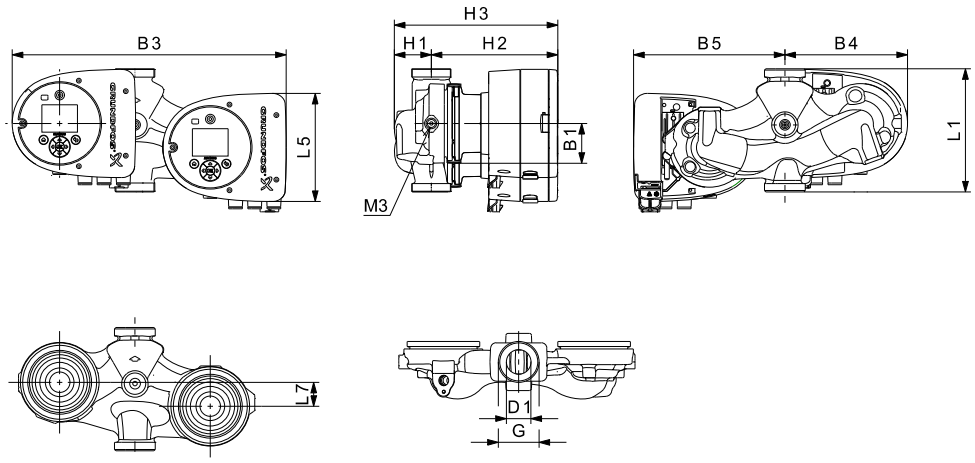


TM05 7939 1613

| Pump type | Dimensions [mm] | | | | | | | | | | | [inch] | |
|---|---|---|---|---|---|---|---|---|---|---|---|---|---|
| | L1 | L5 | L7 | B1 | B3 | B4 | B5 | H1 | H2 | H3 | D1 | G | M3 |
| MAGNA3 D 32-40 | 180 | 158 | 35 | 58 | 400 | 179 | 221 | 54 | 185 | 239 | 32 | 2 | 1/4 |

For product numbers, see page 139.

## MAGNA3 32-60 (N)

## 1 x 230 V, 50/60 Hz

Proportional pressure

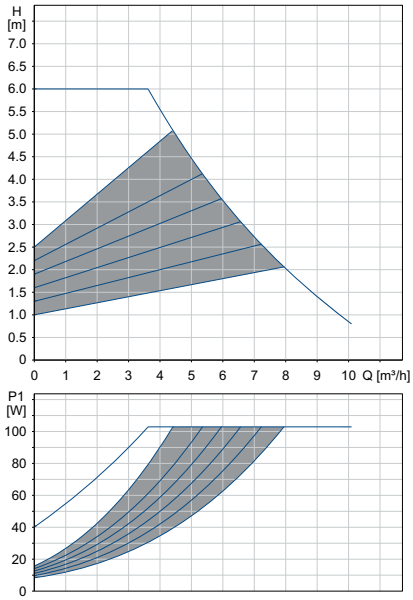


Constant pressure

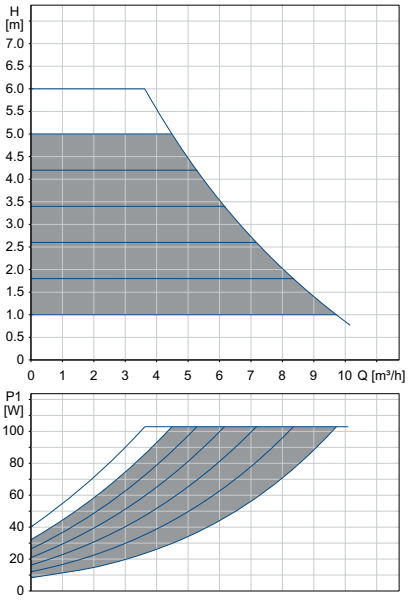


0-10 volt*

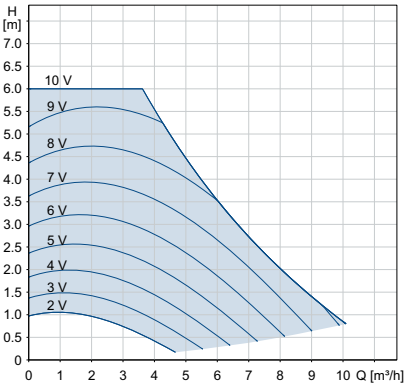


| Speed | P1 [W] | $I_1$ [A] |
|---|---|---|
| **Min.** | 9 | 0.09 |
| **Max.** | 103 | 0.91 |

The pump incorporates overload protection.

| Net weights [kg] | Gross weights [kg] | Ship. vol. [m³] |
|---|---|---|
| 4.8 | 5.3 | 0.01 |

* External setpoint influence shown with a set point of $H_{max}$

Connections: See *Pipe connections*, page 134.

System pressure: Max. 1.0 MPa (10 bar).
Also available as max. 1.6 MPa (16 bar).

Liquid temperature: -10 to +110 °C (TF 110).

Also available with: Stainless-steel pump housing, type N.

Specific EEI: 0.18.

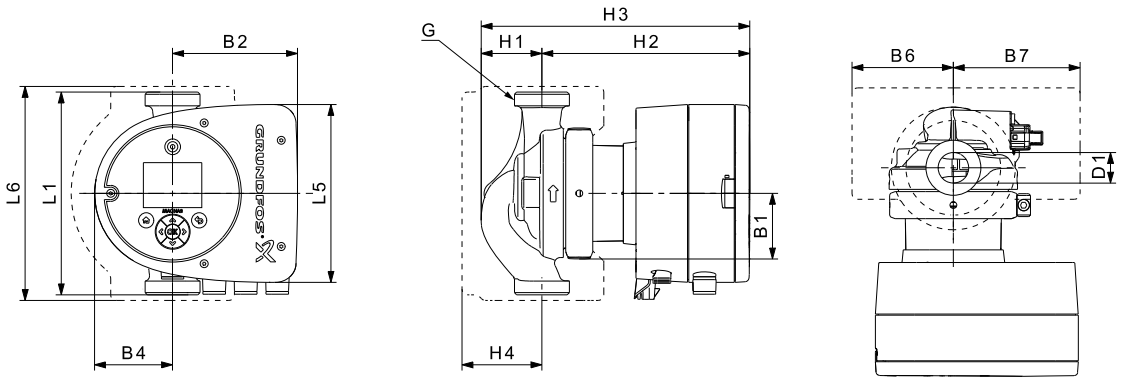


| Pump type | Dimensions [mm] | | | | | | | | | | | | | [inch] |
|---|---|---|---|---|---|---|---|---|---|---|---|---|---|---|
| | L1 | L5 | L6 | B1 | B2 | B4 | B6 | B7 | H1 | H2 | H3 | H4 | D1 | G |
| MAGNA3 32-60 (N) | 180 | 158 | 190 | 58 | 111 | 69 | 90 | 113 | 54 | 185 | 239 | 71 | 32 | 2 |

For product numbers, see page 139.

## MAGNA3 D 32-60 — 1 x 230 V, 50/60 Hz

Proportional pressure

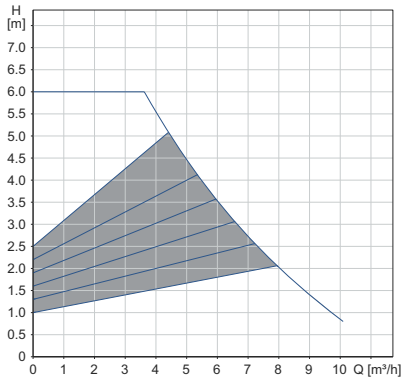


Constant pressure

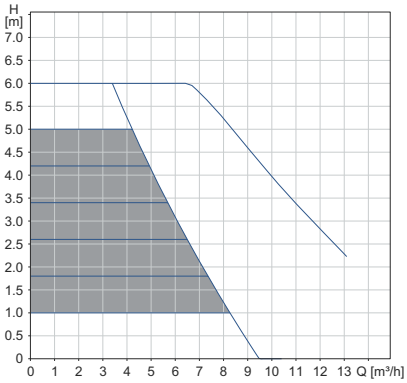


0-10 volt*

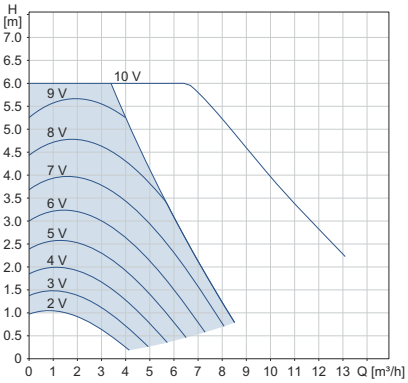


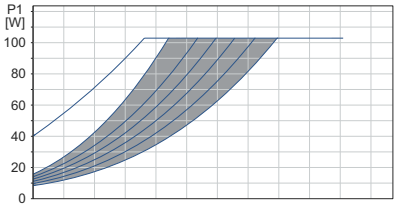


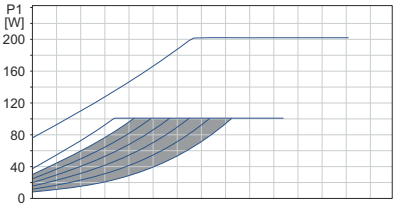


| Speed | P1 [W] | $I_1$ [A] |
|---|---|---|
| **Min.** | 9 | 0.09 |
| **Max.** | 101 | 0.91 |

The pump incorporates overload protection.

| Net weights [kg] | Gross weights [kg] | Ship. vol. [m³] |
|---|---|---|
| 13.2 | 14.0 | 0.04 |

* External setpoint influence shown with a set point of $H_{max}$

Connections: See *Pipe connections*, page 134.

System pressure: Max. 1.0 MPa (10 bar). Also available as max. 1.6 MPa (16 bar).

Liquid temperature: -10 to +110 °C (TF 110).

Specific EEI: 0.18.

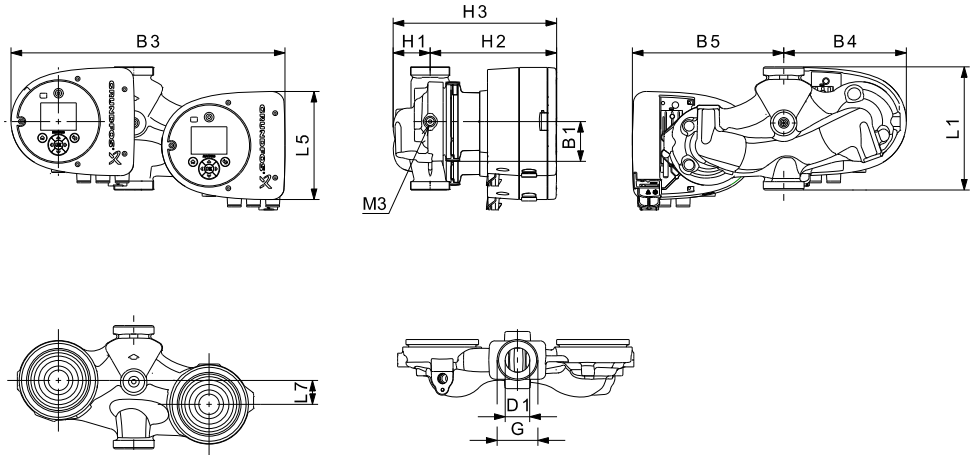


TM05 7939 1613

| Pump type | Dimensions [mm] | | | | | | | | | | | [inch] | |
|---|---|---|---|---|---|---|---|---|---|---|---|---|---|
| | L1 | L5 | L7 | B1 | B3 | B4 | B5 | H1 | H2 | H3 | D1 | G | M3 |
| MAGNA3 D 32-60 | 180 | 158 | 35 | 58 | 400 | 179 | 221 | 54 | 185 | 239 | 32 | 2 | 1/4 |

For product numbers, see page 139.

## MAGNA3 32-80 (N)

**1 x 230 V, 50/60 Hz**

Proportional pressure | Constant pressure | 0-10 volt*

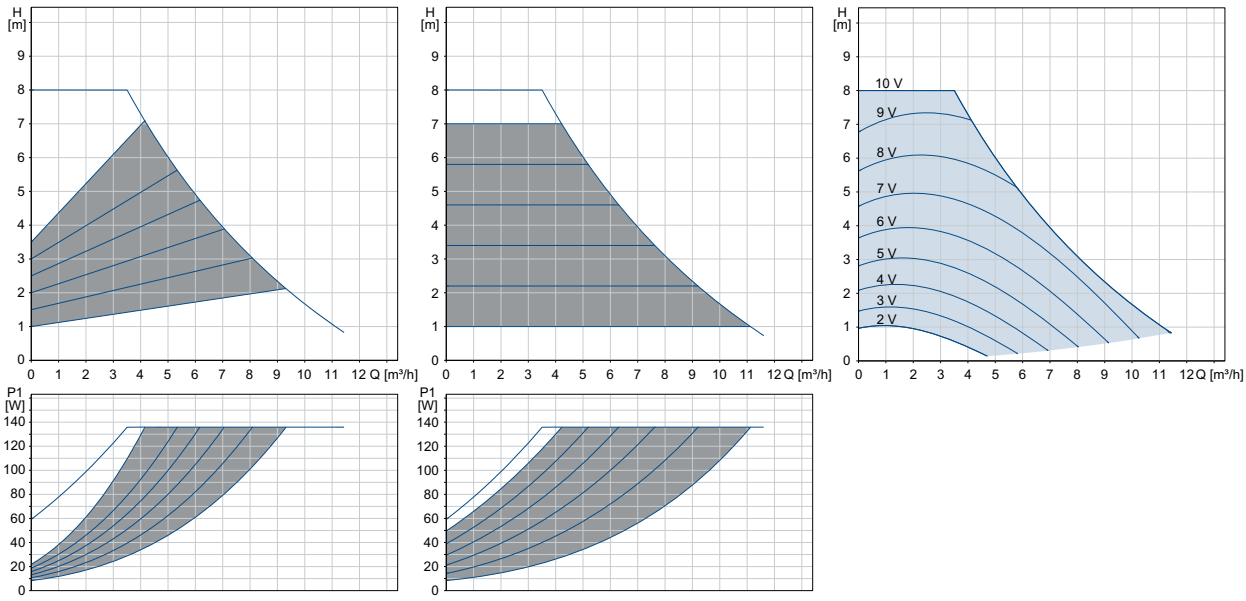


| Speed | P1 [W] | $I_1$ [A] |
|---|---|---|
| **Min.** | 9 | 0.09 |
| **Max.** | 136 | 1.19 |

The pump incorporates overload protection.

| Net weights [kg] | Gross weights [kg] | Ship. vol. [m³] |
|---|---|---|
| 4.8 | 5.3 | 0.01 |

* External setpoint influence shown with a set point of $H_{max}$

Connections: See *Pipe connections*, page 134.

System pressure: Max. 1.0 MPa (10 bar). Also available as max. 1.6 MPa (16 bar).

Liquid temperature: -10 to +110 °C (TF 110).

Also available with: Stainless-steel pump housing, type N.

Specific EEI: 0.18.

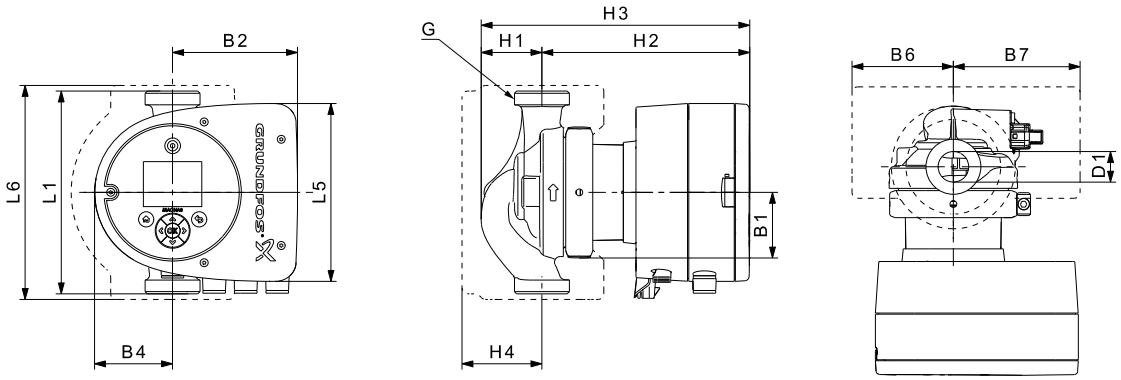


TM05 7938 1713

| Pump type | Dimensions [mm] | | | | | | | | | | | | | [inch] |
|---|---|---|---|---|---|---|---|---|---|---|---|---|---|---|
| | L1 | L5 | L6 | B1 | B2 | B4 | B6 | B7 | H1 | H2 | H3 | H4 | D1 | G |
| MAGNA3 32-80 (N) | 180 | 158 | 190 | 58 | 111 | 69 | 90 | 113 | 54 | 185 | 239 | 71 | 32 | 2 |

For product numbers, see page 139.

## MAGNA3 D 32-80

**1 x 230 V, 50/60 Hz**

Proportional pressure

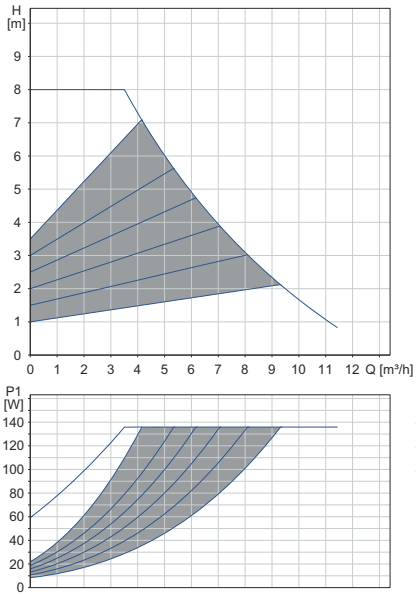


Constant pressure

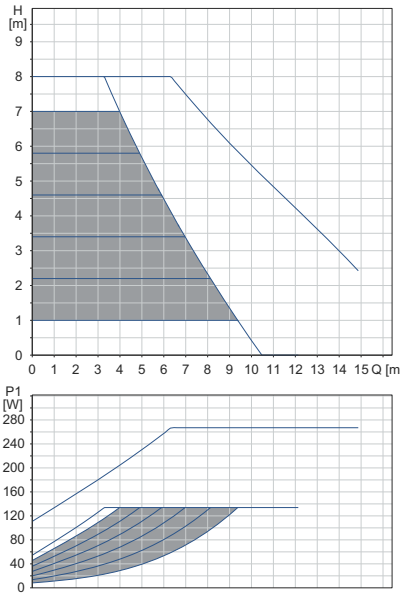


0-10 volt*

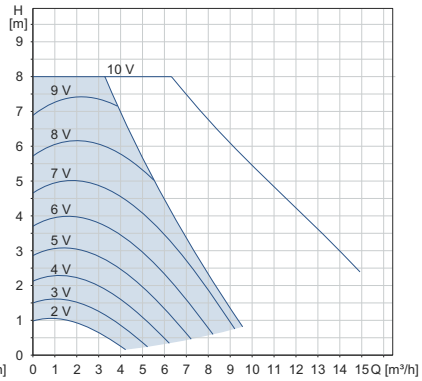


| Speed | P1 [W] | $I_1$ [A] |
|---|---|---|
| **Min.** | 9 | 0.09 |
| **Max.** | 134 | 1.19 |

The pump incorporates overload protection.

| Net weights [kg] | Gross weights [kg] | Ship. vol. [m³] |
|---|---|---|
| 13.2 | 14.0 | 0.04 |

* External setpoint influence shown with a set point of $H_{max}$

Connections: See *Pipe connections*, page 134.

System pressure: Max. 1.0 MPa (10 bar). Also available as max. 1.6 MPa (16 bar).

Liquid temperature: -10 to +110 °C (TF 110).

Specific EEI: 0.18.

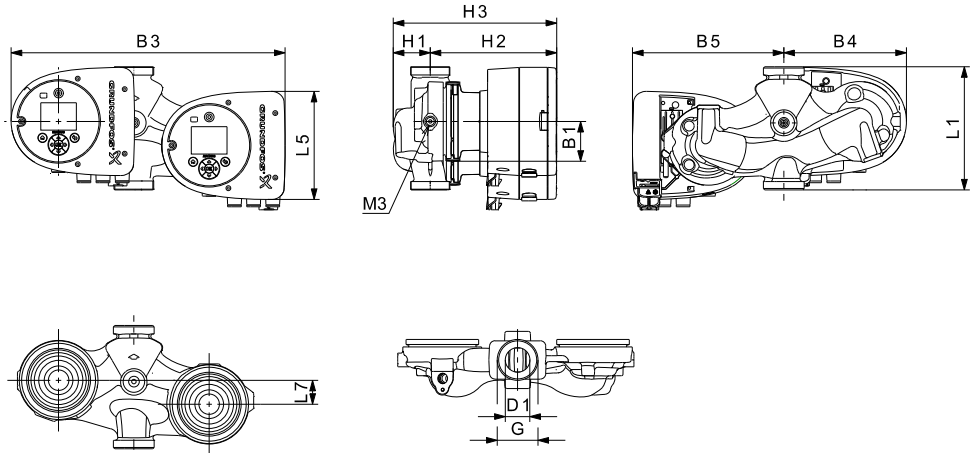


TM05 7939 1613

| Pump type | Dimensions [mm] | | | | | | | | | | | [inch] | |
|---|---|---|---|---|---|---|---|---|---|---|---|---|---|
| | L1 | L5 | L7 | B1 | B3 | B4 | B5 | H1 | H2 | H3 | D1 | G | M3 |
| MAGNA3 D 32-80 | 180 | 158 | 35 | 58 | 400 | 179 | 221 | 54 | 185 | 239 | 32 | 2 | 1/4 |

For product numbers, see page 139.

## MAGNA3 32-100 (N)

## 1 x 230 V, 50/60 Hz

Proportional pressure

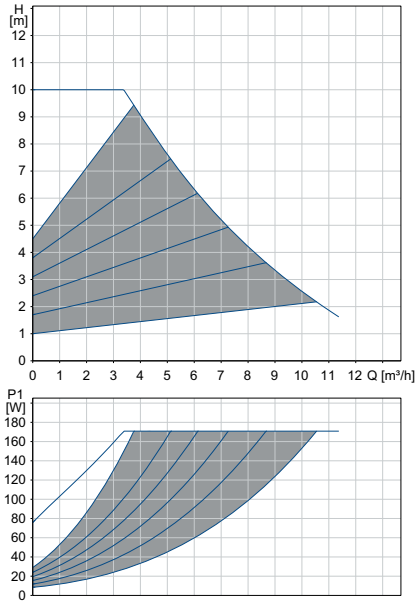


Constant pressure

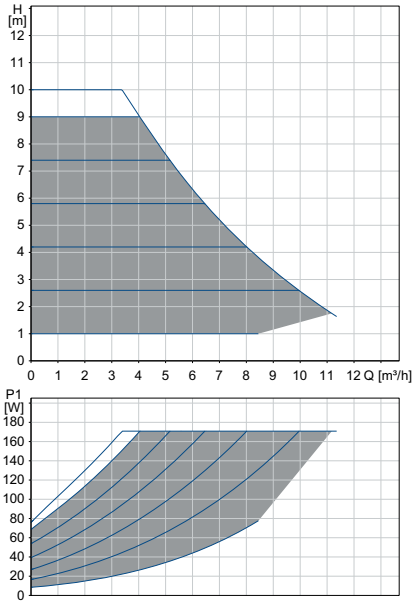


0-10 volt*

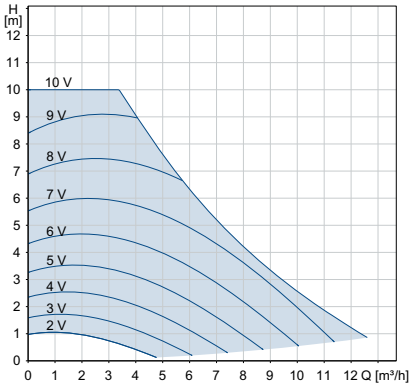


| Speed | P1 [W] | $I_1$ [A] |
|---|---|---|
| **Min.** | 9 | 0.09 |
| **Max.** | 171 | 1.47 |

The pump incorporates overload protection.

| Net weights [kg] | Gross weights [kg] | Ship. vol. [m³] |
|---|---|---|
| 4.8 | 5.3 | 0.01 |

* External setpoint influence shown with a set point of $H_{max}$

Connections: See *Pipe connections*, page 134.

System pressure: Max. 1.0 MPa (10 bar).
Also available as max. 1.6 MPa (16 bar).

Liquid temperature: -10 to +110 °C (TF 110).

Also available with: Stainless-steel pump housing, type N.

Specific EEI: 0.18.

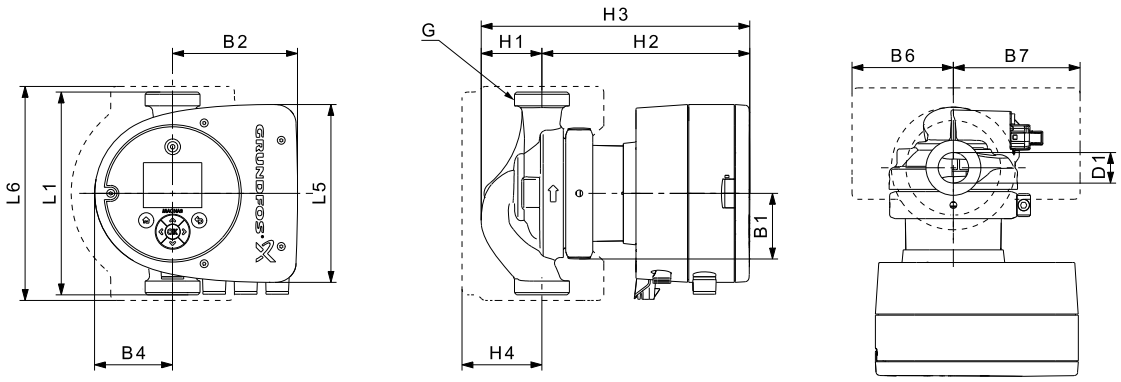


| Pump type | Dimensions [mm] | | | | | | | | | | | | | [inch] |
|---|---|---|---|---|---|---|---|---|---|---|---|---|---|---|
| | L1 | L5 | L6 | B1 | B2 | B4 | B6 | B7 | H1 | H2 | H3 | H4 | D1 | G |
| MAGNA 32-100 (N) | 180 | 158 | 190 | 58 | 111 | 69 | 90 | 113 | 54 | 185 | 239 | 71 | 32 | 2 |

For product numbers, see page 139.

## MAGNA3 D 32-100 — 1 x 230 V, 50/60 Hz

Proportional pressure

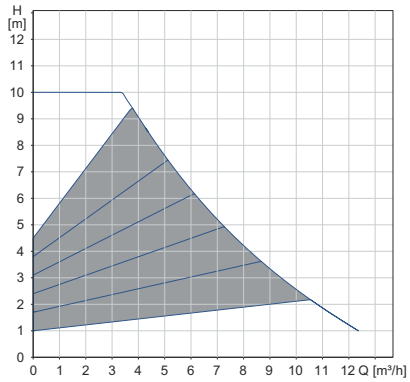


Constant pressure

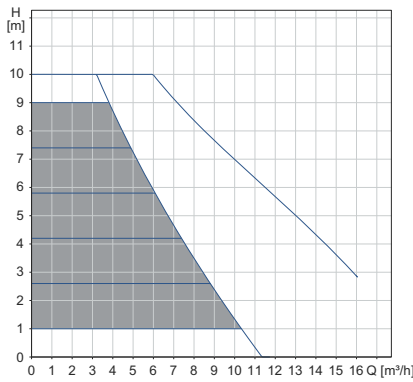


0-10 volt*

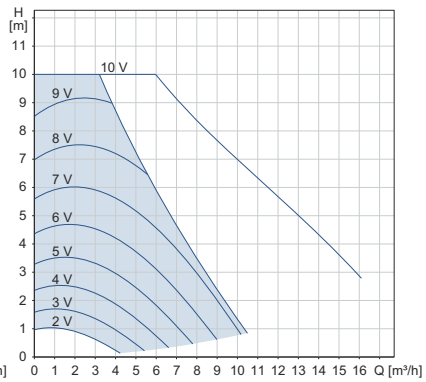


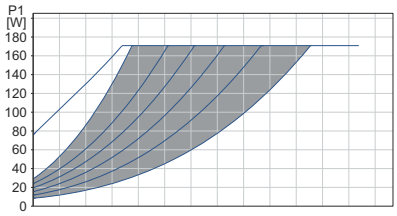


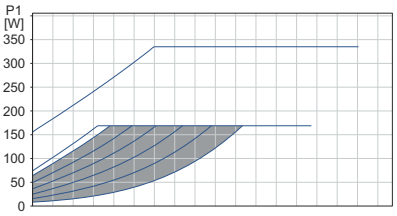


| Speed | P1 [W] | $I_1$ [A] |
|---|---|---|
| **Min.** | 9 | 0.09 |
| **Max.** | 169 | 1.47 |

The pump incorporates overload protection.

| Net weights [kg] | Gross weights [kg] | Ship. vol. [m³] |
|---|---|---|
| 13.2 | 14.0 | 0.04 |

* External setpoint influence shown with a set point of $H_{max}$

Connections: See *Pipe connections*, page 134.

System pressure: Max. 1.0 MPa (10 bar).
Also available as max. 1.6 MPa (16 bar).

Liquid temperature: -10 to +110 °C (TF 110).

Specific EEI: 0.18.

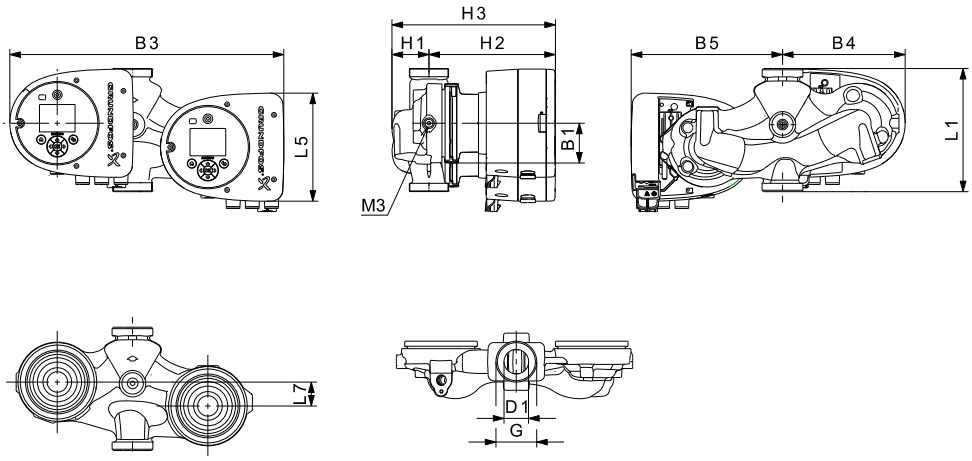


TM05 7939 1613

| Pump type | Dimensions [mm] | | | | | | | | | | | [inch] | |
|---|---|---|---|---|---|---|---|---|---|---|---|---|---|
| | L1 | L5 | L7 | B1 | B3 | B4 | B5 | H1 | H2 | H3 | D1 | G | M3 |
| MAGNA3 D 32-100 | 180 | 158 | 35 | 58 | 400 | 179 | 221 | 54 | 185 | 239 | 32 | 2 | 1/4 |

For product numbers, see page 139.

## MAGNA3 32-120 (N)

## 1 x 230 V, 50/60 Hz

Proportional pressure

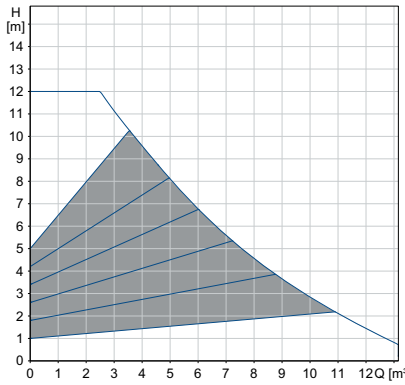


Constant pressure

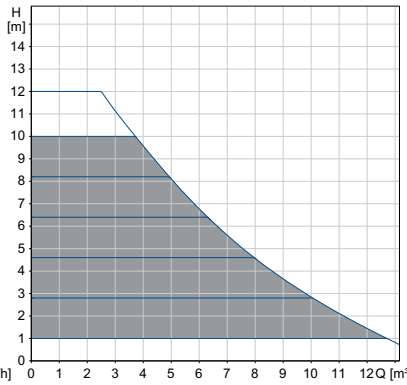


0-10 volt*

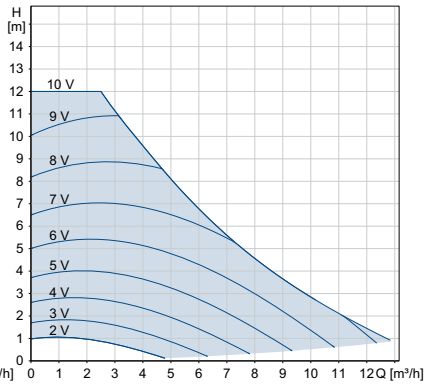


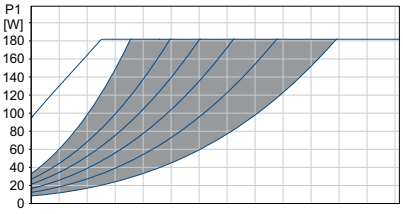


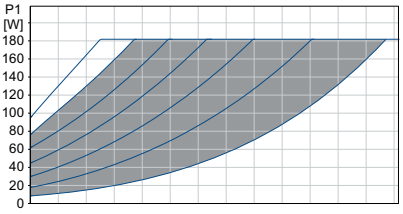


| Speed | P1 [W] | $I_1$ [A] |
|---|---|---|
| **Min.** | 9 | 0.09 |
| **Max.** | 182 | 1.56 |

The pump incorporates overload protection.

| Net weights [kg] | Gross weights [kg] | Ship. vol. [m³] |
|---|---|---|
| 5.02 | 5.99 | 0.01 |

* External setpoint influence shown with a set point of $H_{max}$

| | |
|---|---|
| Connections: | See *Pipe connections*, page 134. |
| System pressure: | Max. 1.0 MPa (10 bar).<br>Also available as max. 1.6 MPa (16 bar). |
| Liquid temperature: | -10 to +110 °C (TF 110). |
| Also available with: | Stainless-steel pump housing, type N. |
| Specific EEI: | 0.18. |

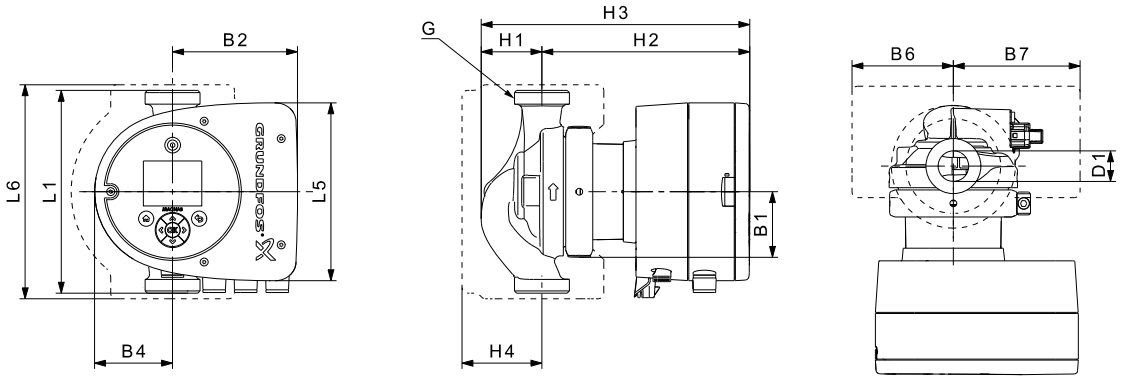


| Pump type | Dimensions [mm] | | | | | | | | | | | | | [inch] |
|---|---|---|---|---|---|---|---|---|---|---|---|---|---|---|
| | L1 | L5 | L6 | B1 | B2 | B4 | B6 | B7 | H1 | H2 | H3 | H4 | D1 | G |
| MAGNA3 32-120 (N) | 180 | 158 | 190 | 58 | 111 | 69 | 90 | 113 | 54 | 185 | 239 | 71 | 32 | 2 |

For product numbers, see page 139.

## MAGNA3 32-40 F (N)

**1 x 230 V, 50/60 Hz**

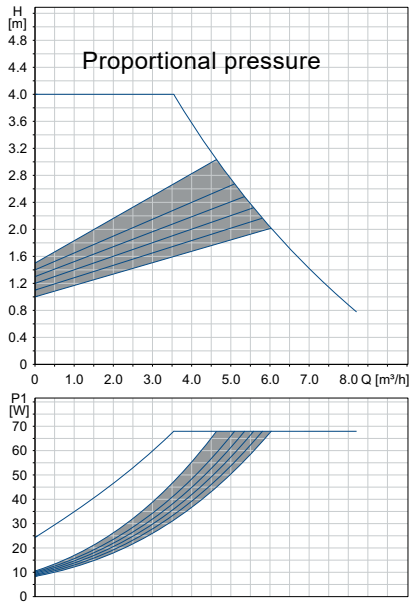


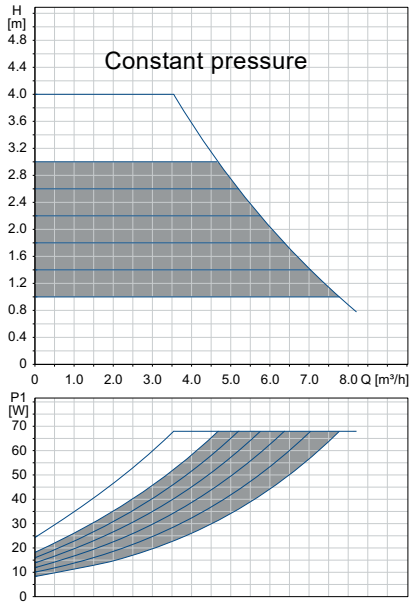


0-10 volt*

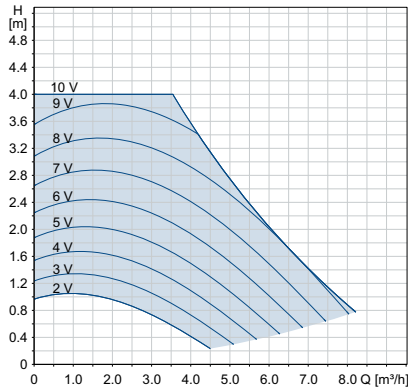


| Speed | P1 [W] | $I_1$ [A] |
|---|---|---|
| **Min.** | 9 | 0.09 |
| **Max.** | 68 | 0.61 |

The pump incorporates overload protection.

| Net weights [kg] | Gross weights [kg] | Ship. vol. [m³] |
|---|---|---|
| 7.8 | 8.3 | 0.02 |

* External setpoint influence shown with a set point of $H_{max}$

Connections: See *Pipe connections*, page 134.

System pressure: Max. 1.0 MPa (10 bar).
Also available as max. 1.6 MPa (16 bar).

Liquid temperature: -10 to +110 °C (TF 110).

Also available with: Stainless-steel pump housing, type N.

Specific EEI: 0.18.

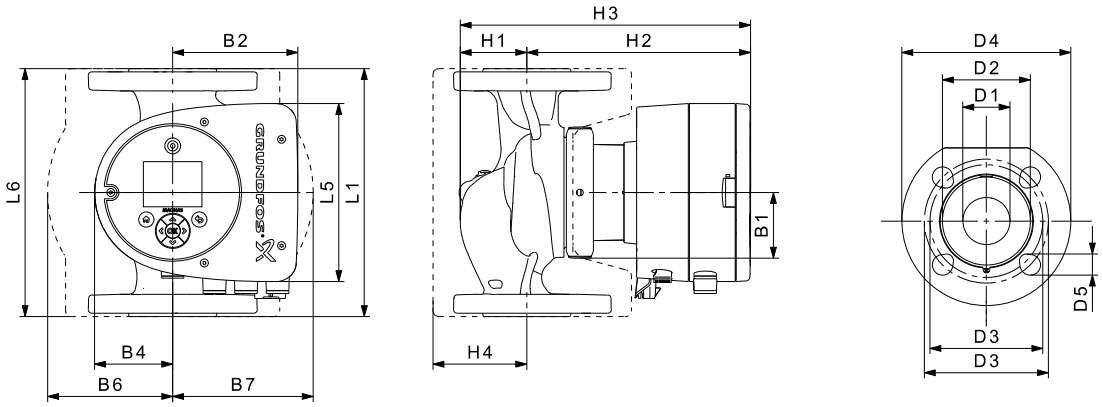


| Pump type | Dimensions [mm] | | | | | | | | | | | | | | | | |
|---|---|---|---|---|---|---|---|---|---|---|---|---|---|---|---|---|---|
| | L1 | L5 | L6 | B1 | B2 | B4 | B6 | B7 | H1 | H2 | H3 | H4 | D1 | D2 | D3 | D4 | D5 |
| MAGNA3 32-40 F (N) | 220 | 158 | 220 | 58 | 111 | 69 | 100 | 110 | 65 | 185 | 250 | 82 | 32 | 76 | 90/100 | 140 | 14/19 |

For product numbers, see page 139.

## MAGNA3 D 32-40 F

**1 x 230 V, 50/60 Hz**

Proportional pressure

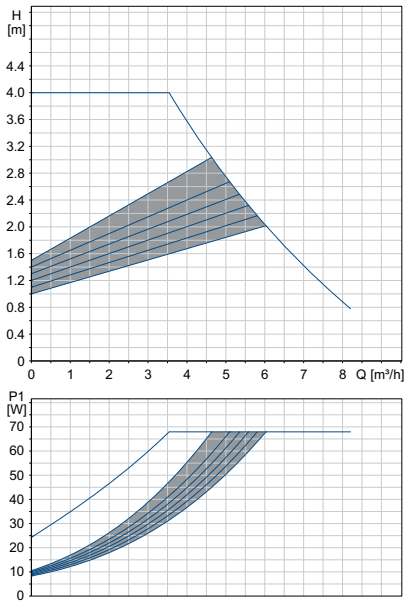


Constant pressure

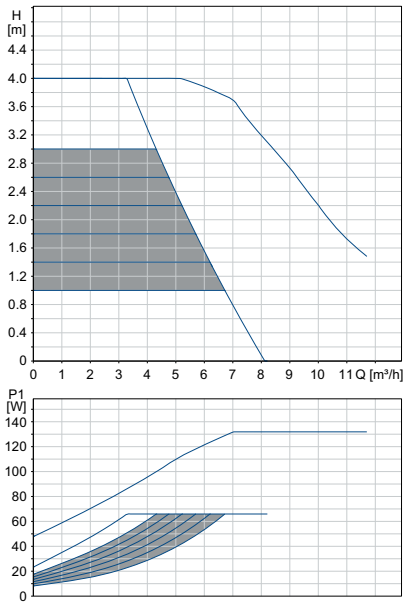


0-10 volt*

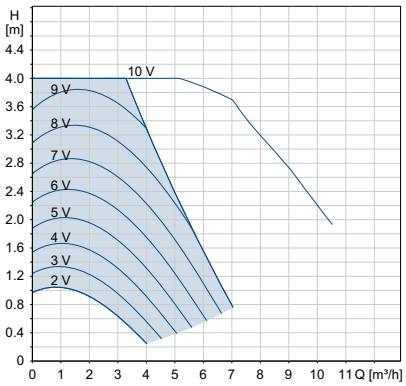


| Speed | P1 [W] | $I_1$ [A] |
|---|---|---|
| **Min.** | 9 | 0.09 |
| **Max.** | 66 | 0.61 |

The pump incorporates overload protection.

| Net weights [kg] | Gross weights [kg] | Ship. vol. [m³] |
|---|---|---|
| 15.6 | 16.3 | 0.04 |

* External setpoint influence shown with a set point of $H_{max}$

Connections: See *Pipe connections*, page 134.

System pressure: Max. 1.0 MPa (10 bar).
Also available as max. 1.6 MPa (16 bar).

Liquid temperature: -10 to +110 °C (TF 110).

Specific EEI: 0.19.

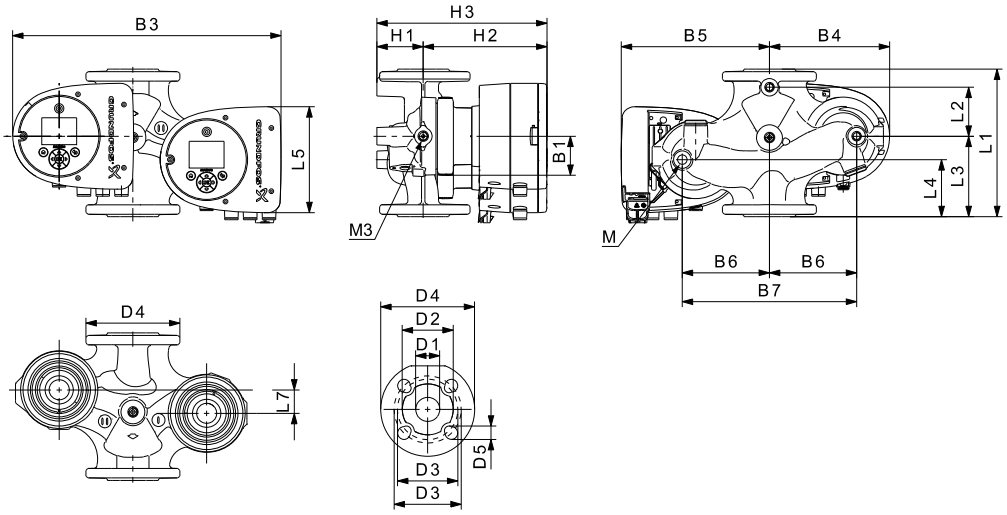


TM05 7986 1713

| Pump type | Dimensions [mm] | | | | | | | | | | | | | | | | | | | | | |
|---|---|---|---|---|---|---|---|---|---|---|---|---|---|---|---|---|---|---|---|---|---|---|
| | L1 | L2 | L3 | L4 | L5 | L7 | B1 | B3 | B4 | B5 | B6 | B7 | H1 | H2 | H3 | D1 | D2 | D3 | D4 | D5 | M | M3 |
| MAGNA3 D 32-40 F | 220 | 73 | 120 | 85 | 158 | 35 | 58 | 400 | 179 | 221 | 130 | 260 | 69 | 185 | 254 | 32 | 76 | 90/100 | 140 | 14/19 | M12 | Rp 1/4 |

For product numbers, see page 139.

## MAGNA3 32-60 F (N)

**1 x 230 V, 50/60 Hz**

Proportional pressure

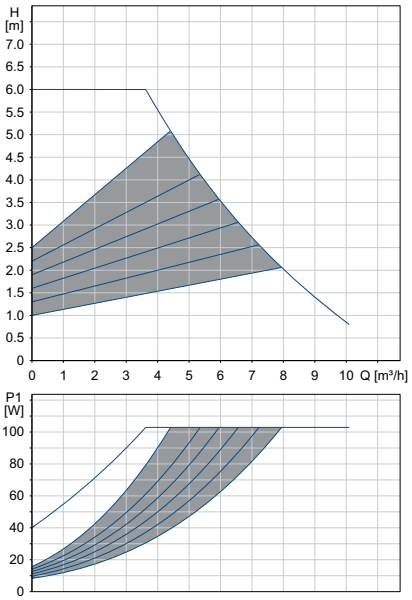


Constant pressure

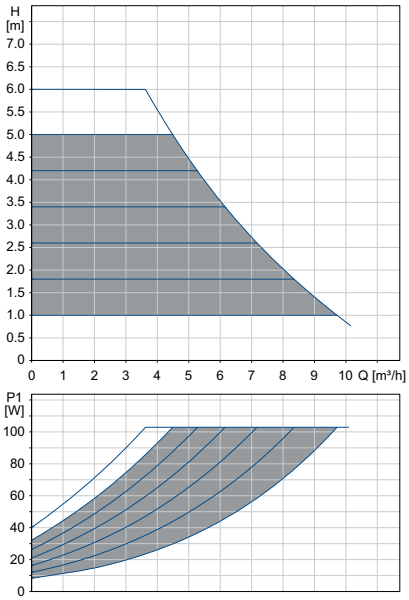


0-10 volt*

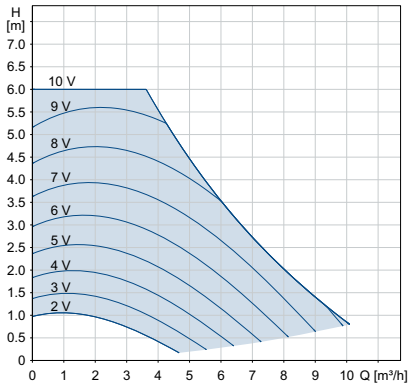


| Speed | P1 [W] | $I_1$ [A] |
|---|---|---|
| **Min.** | 9 | 0.09 |
| **Max.** | 103 | 0.91 |

The pump incorporates overload protection.

| Net weights [kg] | Gross weights [kg] | Ship. vol. [m³] |
|---|---|---|
| 7.8 | 8.3 | 0.02 |

* External setpoint influence shown with a set point of $H_{max}$

| | |
|---|---|
| Connections: | See *Pipe connections*, page 134. |
| System pressure: | Max. 1.0 MPa (10 bar).<br>Also available as max. 1.6 MPa (16 bar). |
| Liquid temperature: | -10 to +110 °C (TF 110). |
| Also available with: | Stainless-steel pump housing, type N. |
| Specific EEI: | 0.18. |

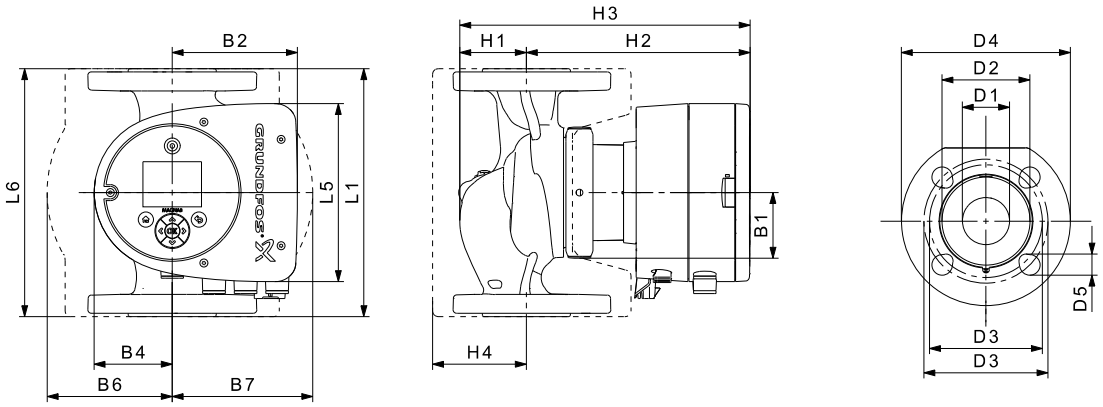


| Pump type | Dimensions [mm] | | | | | | | | | | | | | | | | |
|---|---|---|---|---|---|---|---|---|---|---|---|---|---|---|---|---|---|
| | L1 | L5 | L6 | B1 | B2 | B4 | B6 | B7 | H1 | H2 | H3 | H4 | D1 | D2 | D3 | D4 | D5 |
| MAGNA3 32-60 F (N) | 220 | 158 | 220 | 58 | 111 | 69 | 100 | 110 | 65 | 185 | 250 | 82 | 32 | 76 | 90/100 | 140 | 14/19 |

For product numbers, see page 139.

## MAGNA3 D 32-60 F

**1 x 230 V, 50/60 Hz**

Proportional pressure

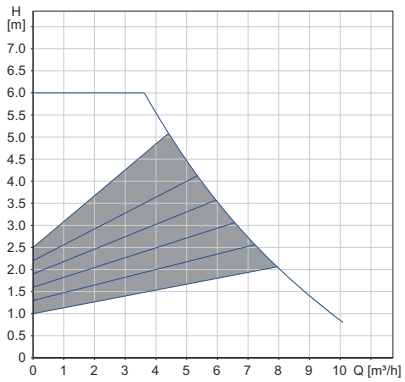


Constant pressure

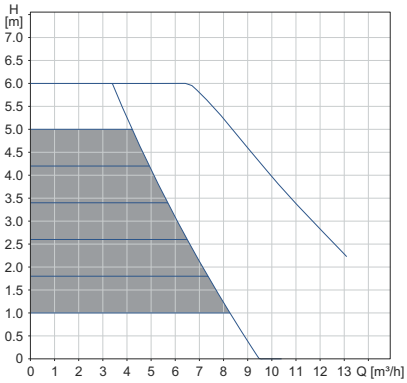


0-10 volt*

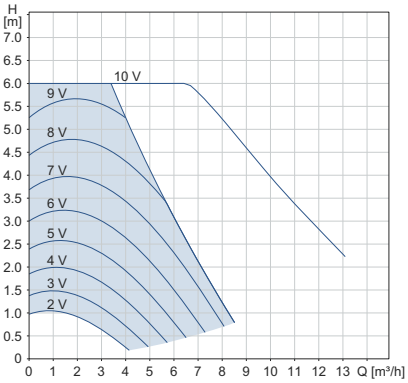


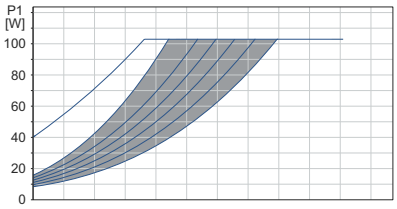


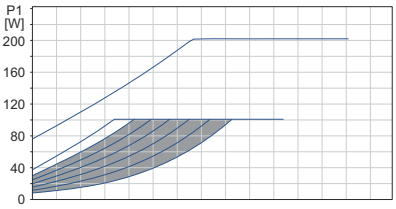


| Speed | P1 [W] | $I_1$ [A] |
|---|---|---|
| **Min.** | 9 | 0.09 |
| **Max.** | 101 | 0.91 |

The pump incorporates overload protection.

| Net weights [kg] | Gross weights [kg] | Ship. vol. [m³] |
|---|---|---|
| 15.6 | 16.3 | 0.04 |

* External setpoint influence shown with a set point of $H_{max}$

Connections: See *Pipe connections*, page 134.

System pressure: Max. 1.0 MPa (10 bar).
Also available as max. 1.6 MPa (16 bar).

Liquid temperature: -10 to +110 °C (TF 110).

Specific EEI: 0.18.

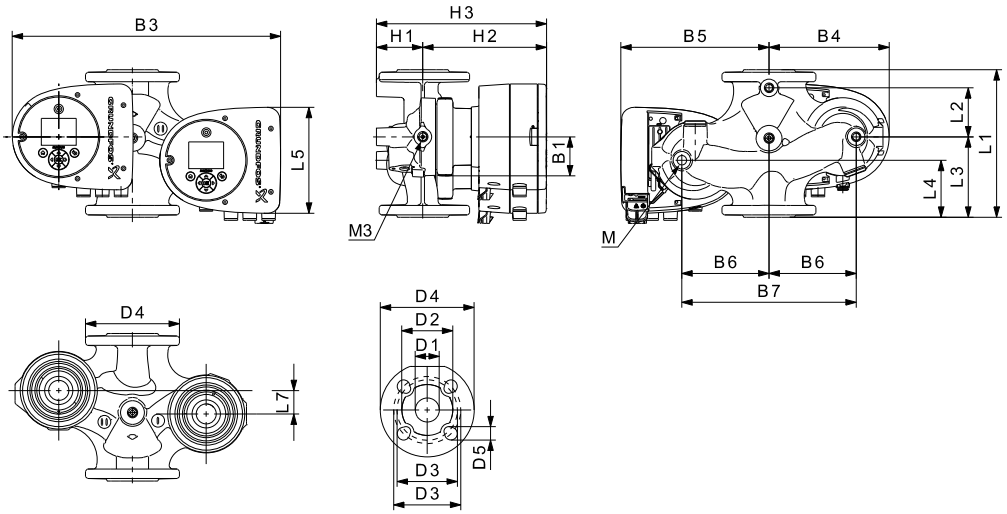


TM05 7986 1713

| Pump type | Dimensions [mm] | | | | | | | | | | | | | | | | | | | | | |
|---|---|---|---|---|---|---|---|---|---|---|---|---|---|---|---|---|---|---|---|---|---|---|
| | L1 | L2 | L3 | L4 | L5 | L7 | B1 | B3 | B4 | B5 | B6 | B7 | H1 | H2 | H3 | D1 | D2 | D3 | D4 | D5 | M | M3 |
| MAGNA3 D 32-60 F | 220 | 73 | 120 | 85 | 158 | 35 | 58 | 400 | 179 | 221 | 130 | 260 | 69 | 185 | 254 | 32 | 76 | 90/100 | 140 | 14/19 | M12 | Rp 1/4 |

For product numbers, see page 139.

## MAGNA3 32-80 F (N)

**1 x 230 V, 50/60 Hz**

Proportional pressure

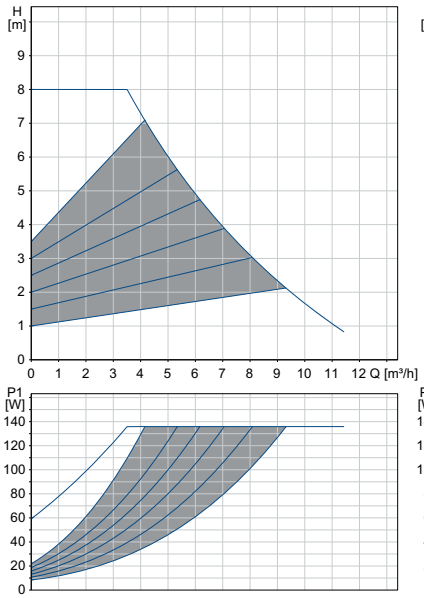


Constant pressure

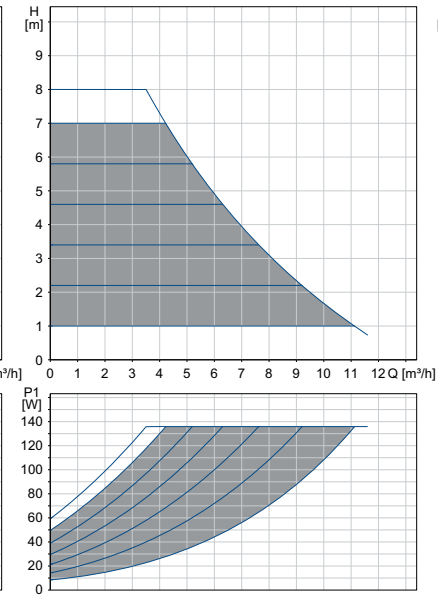


0-10 volt*

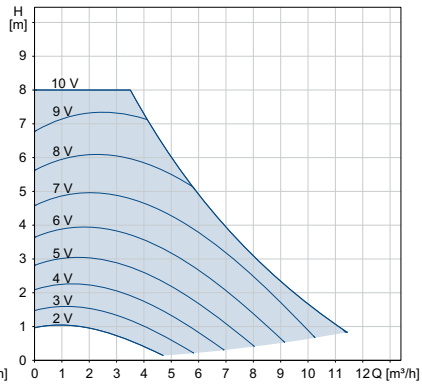


| Speed | P1 [W] | $I_1$ [A] |
|---|---|---|
| **Min.** | 9 | 0.09 |
| **Max.** | 136 | 1.19 |

The pump incorporates overload protection.

| Net weights [kg] | Gross weights [kg] | Ship. vol. [m³] |
|---|---|---|
| 7.8 | 8.3 | 0.02 |

* External setpoint influence shown with a set point of $H_{max}$

Connections: See *Pipe connections*, page 134.

System pressure: Max. 1.0 MPa (10 bar). Also available as max. 1.6 MPa (16 bar).

Liquid temperature: -10 to +110 °C (TF 110).

Also available with: Stainless-steel pump housing, type N.

Specific EEI: 0.18.

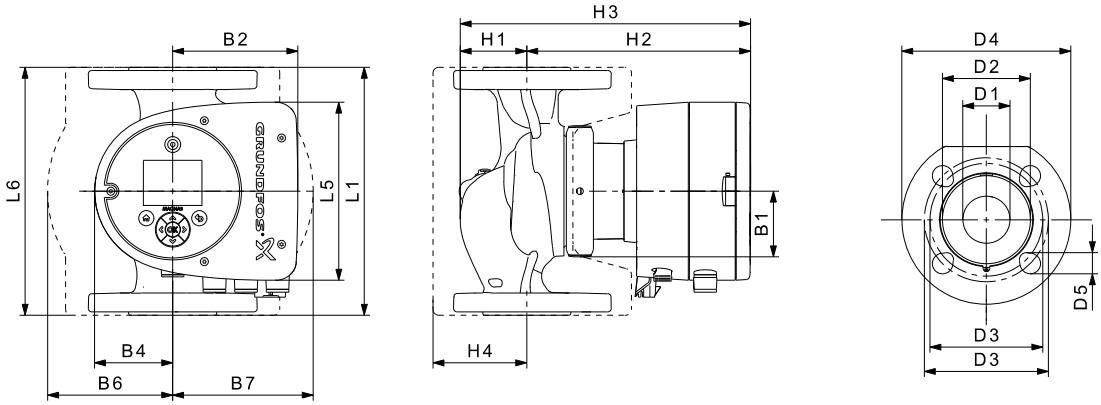


| Pump type | Dimensions [mm] | | | | | | | | | | | | | | | | |
|---|---|---|---|---|---|---|---|---|---|---|---|---|---|---|---|---|---|
| | L1 | L5 | L6 | B1 | B2 | B4 | B6 | B7 | H1 | H2 | H3 | H4 | D1 | D2 | D3 | D4 | D5 |
| MAGNA3 32-80 F (N) | 220 | 158 | 220 | 58 | 111 | 69 | 100 | 110 | 65 | 185 | 250 | 82 | 32 | 76 | 90/100 | 140 | 14/19 |

For product numbers, see page 139.

## MAGNA3 D 32-80 F

## 1 x 230 V, 50/60 Hz

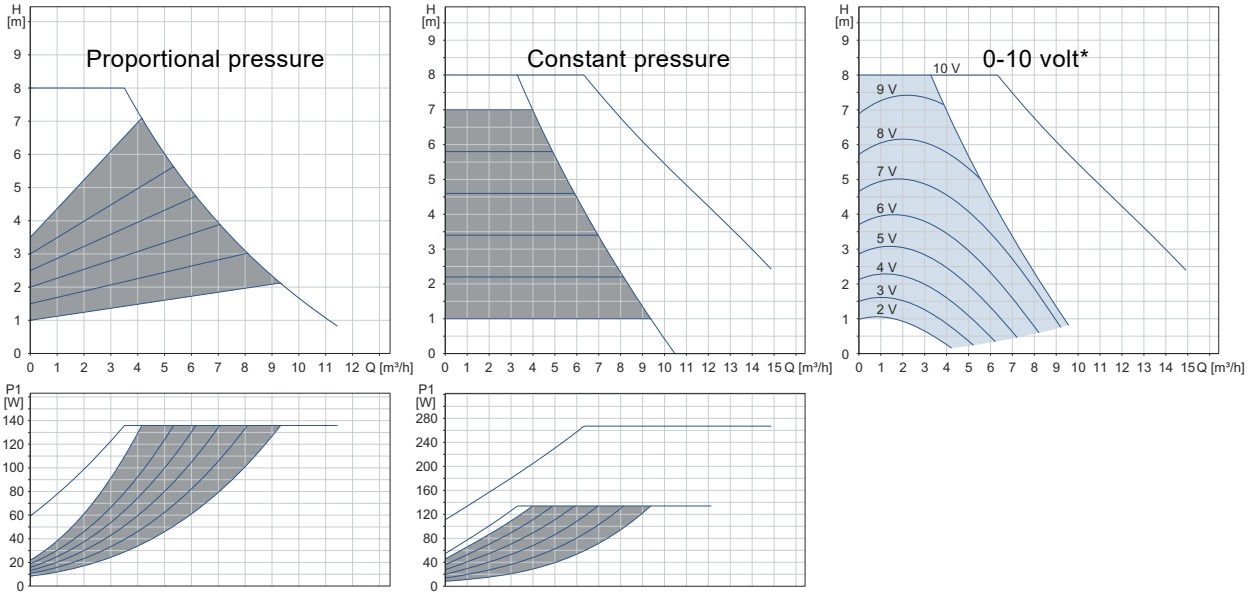


| Speed | P1 [W] | $I_1$ [A] |
|---|---|---|
| **Min.** | 9 | 0.09 |
| **Max.** | 134 | 1.19 |

The pump incorporates overload protection.

| Net weights [kg] | Gross weights [kg] | Ship. vol. [m³] |
|---|---|---|
| 15.6 | 16.3 | 0.04 |

* External setpoint influence shown with a set point of $H_{max}$

Connections: See *Pipe connections*, page 134.

System pressure: Max. 1.0 MPa (10 bar).
Also available as max. 1.6 MPa (16 bar).

Liquid temperature: -10 to +110 °C (TF 110).

Specific EEI: 0.18.

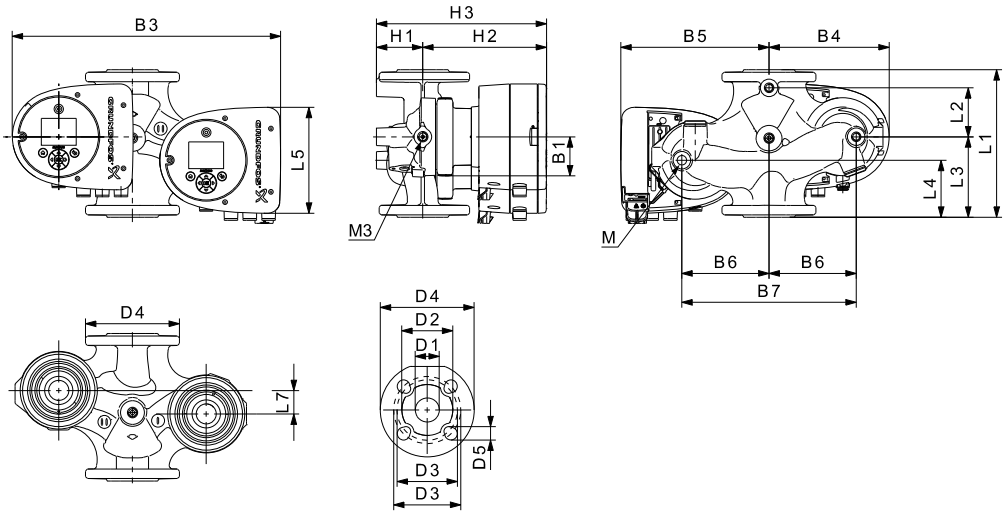


TM05 7986 1713

| Pump type | Dimensions [mm] | | | | | | | | | | | | | | | | | | | | | |
|---|---|---|---|---|---|---|---|---|---|---|---|---|---|---|---|---|---|---|---|---|---|---|
| | L1 | L2 | L3 | L4 | L5 | L7 | B1 | B3 | B4 | B5 | B6 | B7 | H1 | H2 | H3 | D1 | D2 | D3 | D4 | D5 | M | M3 |
| MAGNA3 D 32-80 F | 220 | 73 | 120 | 85 | 158 | 35 | 58 | 400 | 179 | 221 | 130 | 260 | 69 | 185 | 254 | 32 | 76 | 90/100 | 140 | 14/19 | M12 | Rp 1/4 |

For product numbers, see page 139.

## MAGNA3 32-100 F (N)

**1 x 230 V, 50/60 Hz**

Proportional pressure

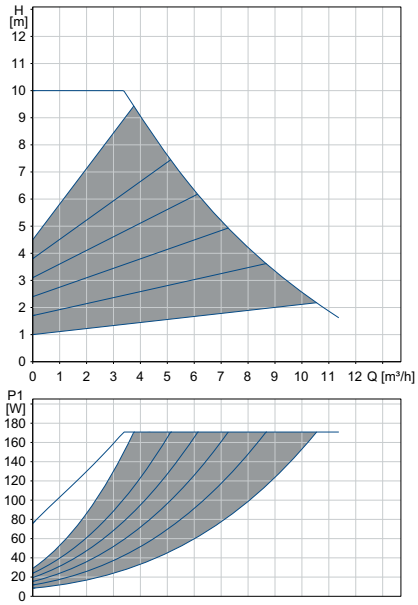


Constant pressure

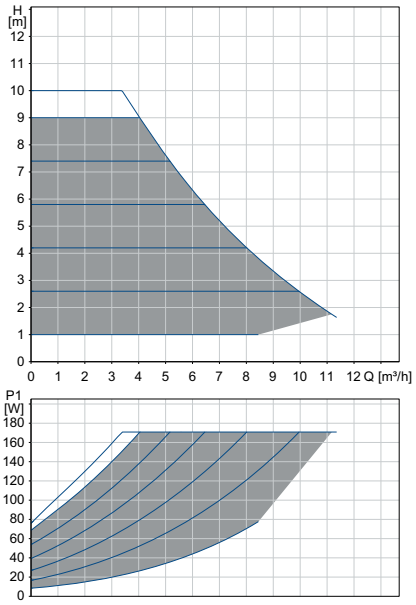


0-10 volt*

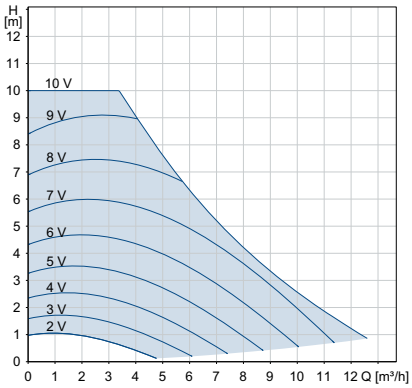


| Speed | P1 [W] | $I_1$ [A] |
|---|---|---|
| **Min.** | 9 | 0.09 |
| **Max.** | 171 | 1.47 |

The pump incorporates overload protection.

| Net weights [kg] | Gross weights [kg] | Ship. vol. [$m^3$] |
|---|---|---|
| 7.8 | 8.3 | 0.02 |

* External setpoint influence shown with a set point of $H_{max}$

| | |
|---|---|
| Connections: | See *Pipe connections*, page 134. |
| System pressure: | Max. 1.0 MPa (10 bar).<br>Also available as max. 1.6 MPa (16 bar). |
| Liquid temperature: | -10 to +110 °C (TF 110). |
| Also available with: | Stainless-steel pump housing, type N. |
| Specific EEI: | 0.18. |

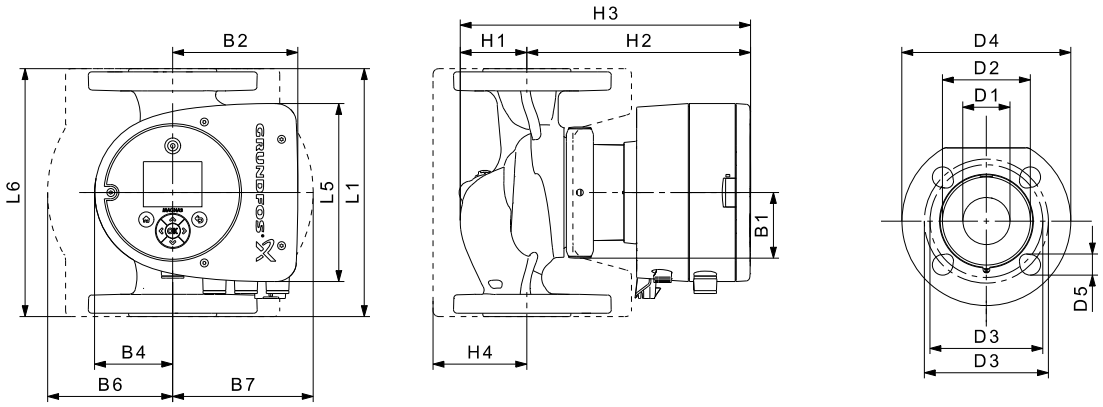


| Pump type | Dimensions [mm] | | | | | | | | | | | | | | | | |
|---|---|---|---|---|---|---|---|---|---|---|---|---|---|---|---|---|---|
| | L1 | L5 | L6 | B1 | B2 | B4 | B6 | B7 | H1 | H2 | H3 | H4 | D1 | D2 | D3 | D4 | D5 |
| MAGNA3 32-100 F (N) | 220 | 158 | 220 | 58 | 111 | 69 | 100 | 110 | 65 | 185 | 250 | 82 | 32 | 76 | 90/100 | 140 | 14/19 |

For product numbers, see page 139.

## MAGNA3 D 32-100 F

## 1 x 230 V, 50/60 Hz

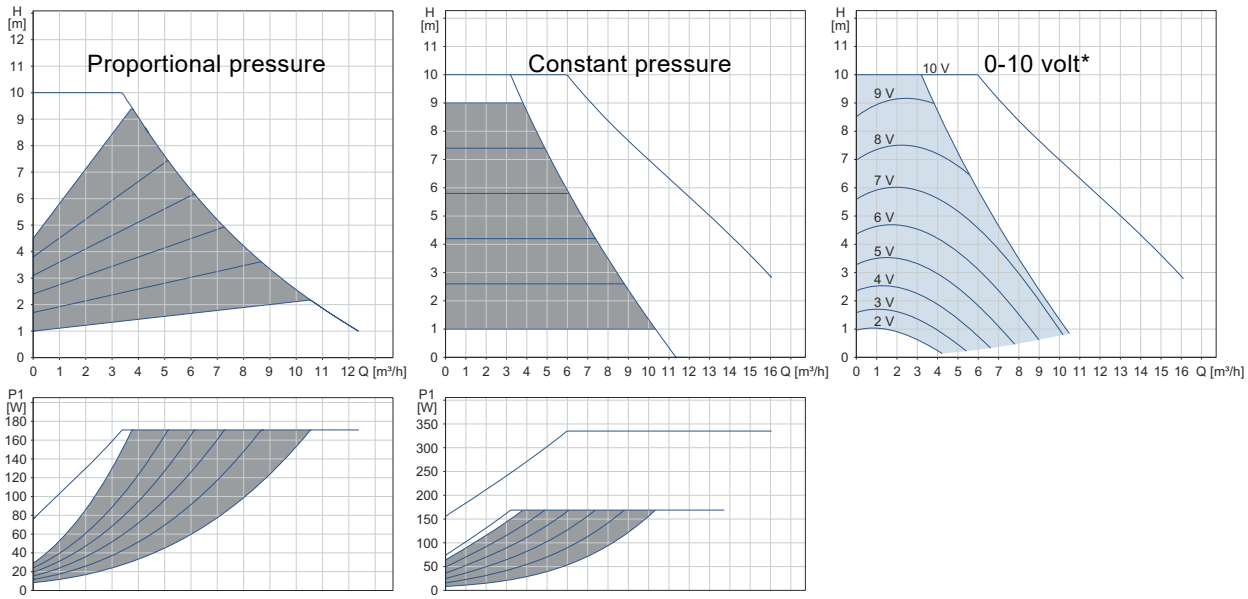


| Speed | P1 [W] | $I_1$ [A] |
|---|---|---|
| **Min.** | 9 | 0.09 |
| **Max.** | 169 | 1.47 |

The pump incorporates overload protection.

| Net weights [kg] | Gross weights [kg] | Ship. vol. [m³] |
|---|---|---|
| 15.6 | 16.3 | 0.04 |

* External setpoint influence shown with a set point of $H_{max}$

Connections: See *Pipe connections*, page 134.

System pressure: Max. 1.0 MPa (10 bar).
Also available as max. 1.6 MPa (16 bar).

Liquid temperature: -10 to +110 °C (TF 110).

Specific EEI: 0.18.

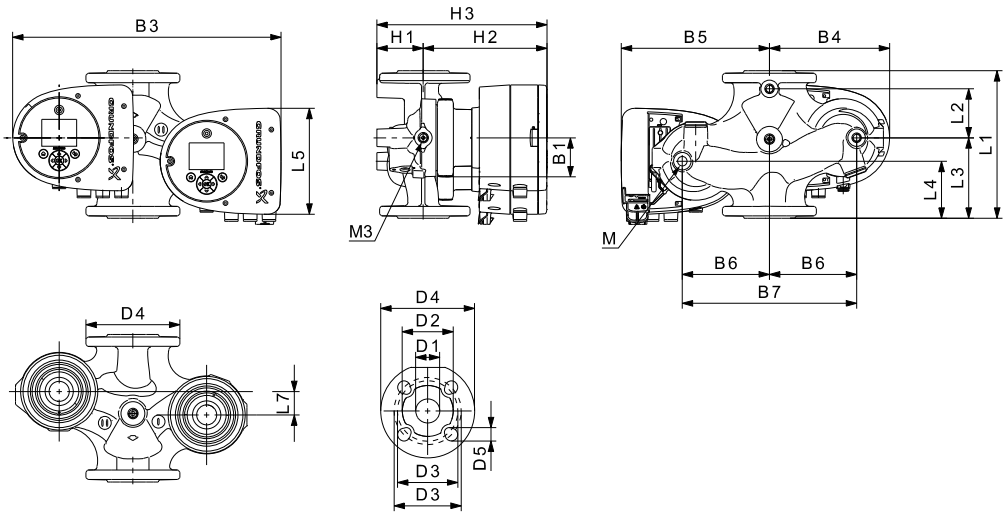


| Pump type | Dimensions [mm] | | | | | | | | | | | | | | | | | | | | | |
|---|---|---|---|---|---|---|---|---|---|---|---|---|---|---|---|---|---|---|---|---|---|---|
| | L1 | L2 | L3 | L4 | L5 | L7 | B1 | B3 | B4 | B5 | B6 | B7 | H1 | H2 | H3 | D1 | D2 | D3 | D4 | D5 | M | M3 |
| MAGNA3 D 32-100 F | 220 | 73 | 120 | 85 | 158 | 35 | 58 | 400 | 179 | 221 | 130 | 260 | 69 | 185 | 254 | 32 | 76 | 90/100 | 140 | 14/19 | M12 | Rp 1/4 |

For product numbers, see page 139.

## MAGNA3 32-120 F (N)

## 1 x 230 V, 50/60 Hz

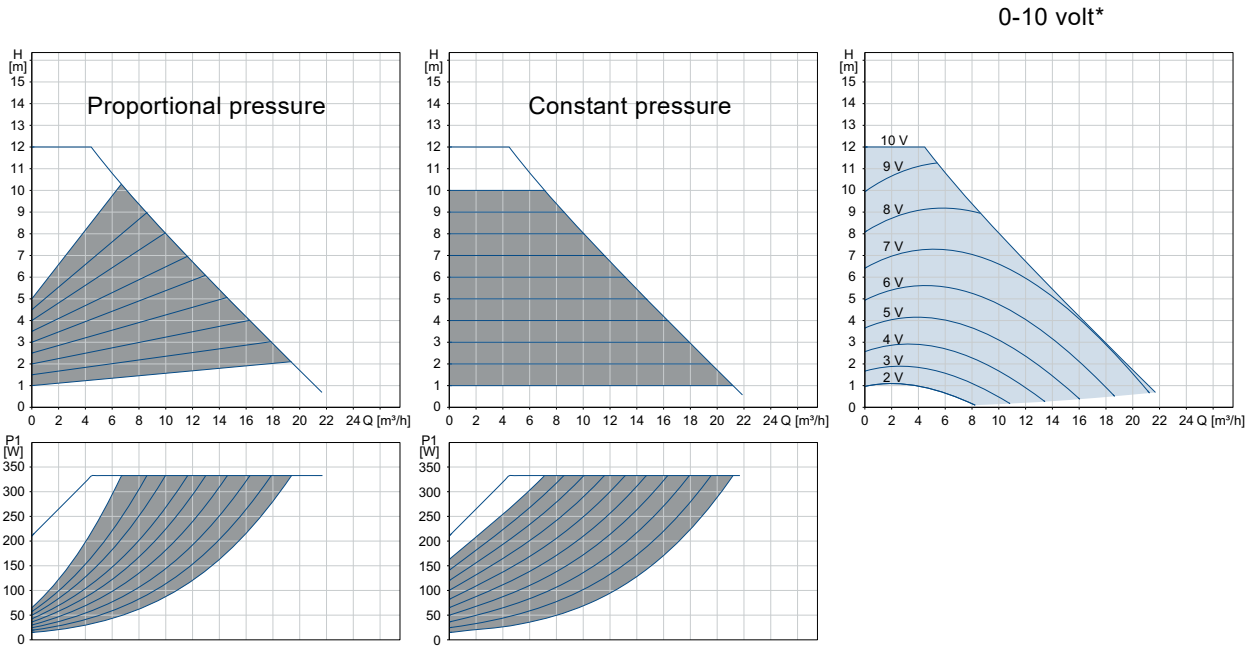


| Speed | P1 [W] | $I_1$ [A] |
|---|---|---|
| **Min.** | 15 | 0.18 |
| **Max.** | 345 | 1.55 |

The pump incorporates overload protection.

| Net weights [kg] | Gross weights [kg] | Ship. vol. [m³] |
|---|---|---|
| 15 | 17.4 | 0.04 |

* External setpoint influence shown with a set point of $H_{max}$

Connections: See *Pipe connections*, page 134.

System pressure: Max. 1.0 MPa (10 bar). Also available as max. 1.6 MPa (16 bar).

Liquid temperature: -10 to +110 °C (TF 110).

Also available with: Stainless-steel pump housing, type N.

Specific EEI: 0.18.

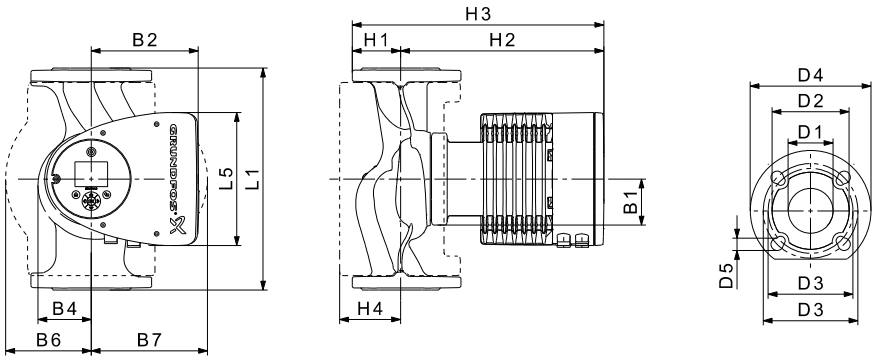


| Pump type | Dimensions [mm] | | | | | | | | | | | | | | | |
|---|---|---|---|---|---|---|---|---|---|---|---|---|---|---|---|---|
| | L1 | L5 | B1 | B2 | B4 | B6 | B7 | H1 | H2 | H3 | H4 | D1 | D2 | D3 | D4 | D5 |
| MAGNA3 32-120 F (N) | 220 | 204 | 84 | 164 | 73 | 106 | 116 | 65 | 301 | 366 | 86 | 32 | 76 | 90/100 | 140 | 14/19 |

For product numbers, see page 139.

## MAGNA3 D 32-120 F

**1 x 230 V, 50/60 Hz**

Proportional pressure

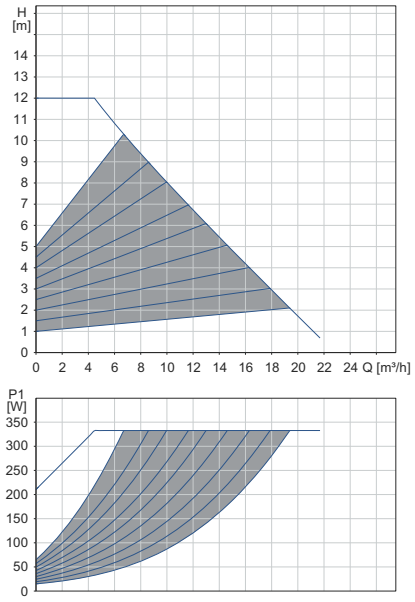


Constant pressure

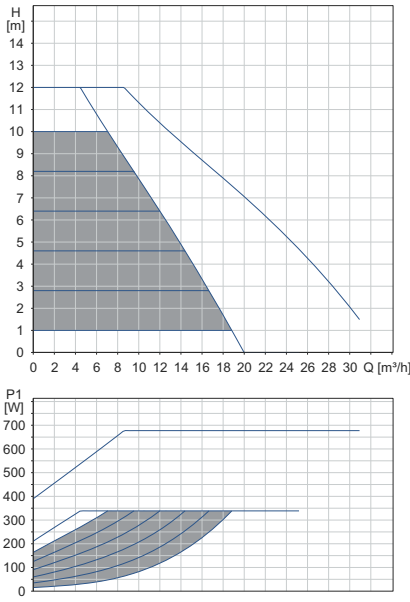


0-10 volt*

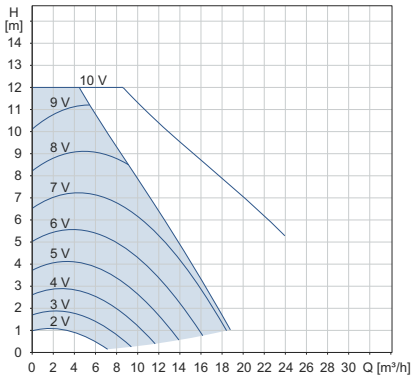


| Speed | P1 [W] | $I_1$ [A] |
|---|---|---|
| **Min.** | 16 | 0.18 |
| **Max.** | 350 | 1.53 |

The pump incorporates overload protection.

| Net weights [kg] | Gross weights [kg] | Ship. vol. [m³] |
|---|---|---|
| 30 | 30.3 | 0.04 |

* External setpoint influence shown with a set point of $H_{max}$

Connections: See *Pipe connections*, page 134.

System pressure: Max. 1.0 MPa (10 bar).
Also available as max. 1.6 MPa (16 bar).

Liquid temperature: -10 to +110 °C (TF 110).

Specific EEI: 0.19.

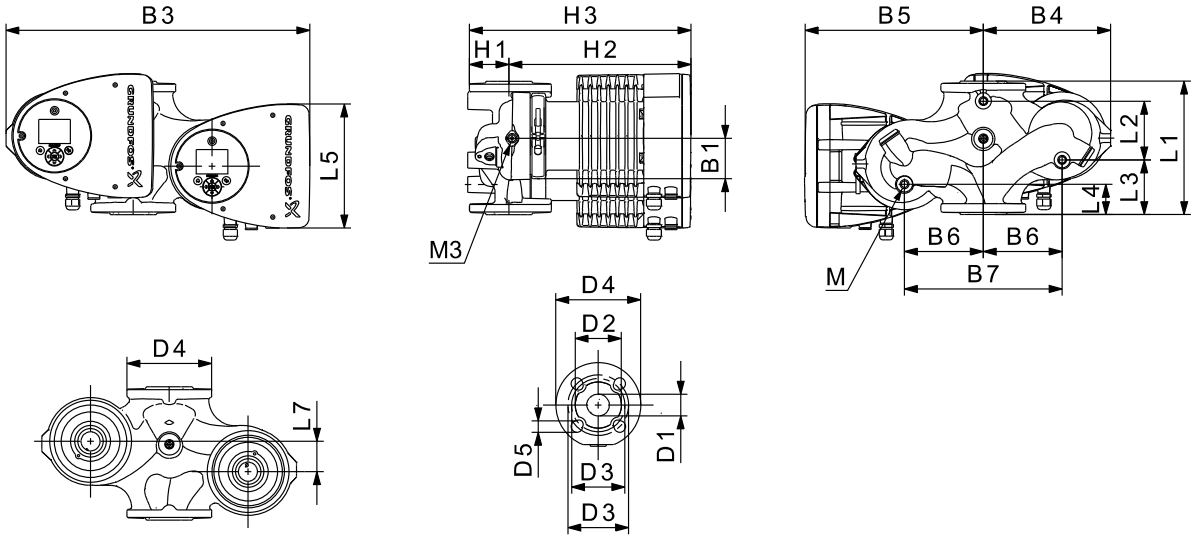


TM05 5294 3612

| Pump type | Dimensions [mm] | | | | | | | | | | | | | | | | | | | | | |
|---|---|---|---|---|---|---|---|---|---|---|---|---|---|---|---|---|---|---|---|---|---|---|
| | L1 | L2 | L3 | L4 | L5 | L7 | B1 | B3 | B4 | B5 | B6 | B7 | H1 | H2 | H3 | D1 | D2 | D3 | D4 | D5 | M | M3 |
| MAGNA3 D 32-120 F | 220 | 97 | 90 | 50 | 204 | 50 | 84 | 502 | 210 | 294 | 130 | 260 | 68 | 300 | 368 | 32 | 76 | 90/100 | 140 | 14/19 | M12 | Rp 1/4 |

For product numbers, see page 139.

## MAGNA3 40-40 F (N)

**1 x 230 V, 50/60 Hz**

Proportional pressure

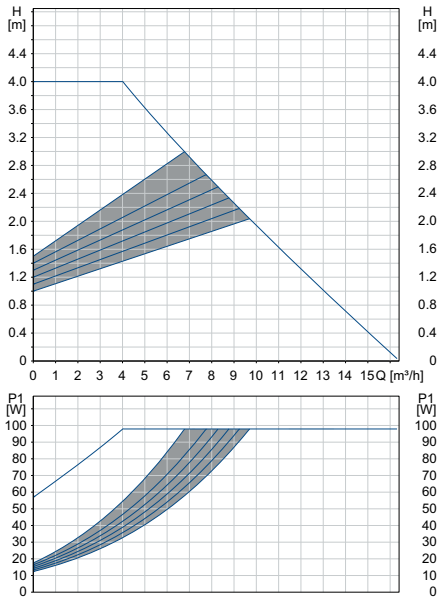


Constant pressure

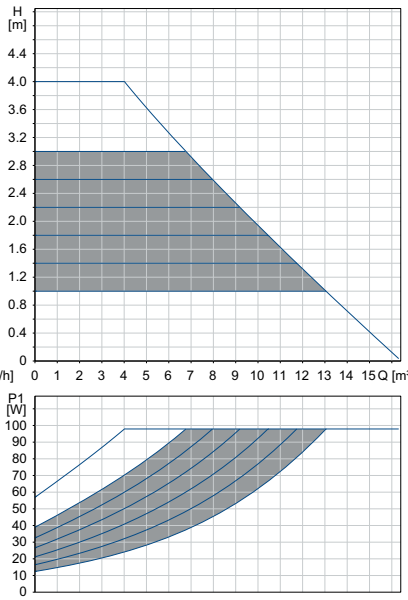


0-10 volt*

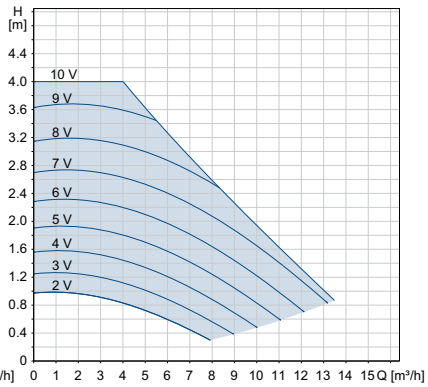


| Speed | P1 [W] | $I_1$ [A] |
|---|---|---|
| **Min.** | 12 | 0.11 |
| **Max.** | 105 | 0.87 |

The pump incorporates overload protection.

| Net weights [kg] | Gross weights [kg] | Ship. vol. [m³] |
|---|---|---|
| 9.8 | 10.4 | 0.02 |

* External setpoint influence shown with a set point of $H_{max}$

| | |
|---|---|
| Connections: | See *Pipe connections*, page 134. |
| System pressure: | Max. 1.0 MPa (10 bar).<br>Also available as max. 1.6 MPa (16 bar). |
| Liquid temperature: | -10 to +110 °C (TF 110). |
| Also available with: | Stainless-steel pump housing, type N. |
| Specific EEI: | 0.18. |

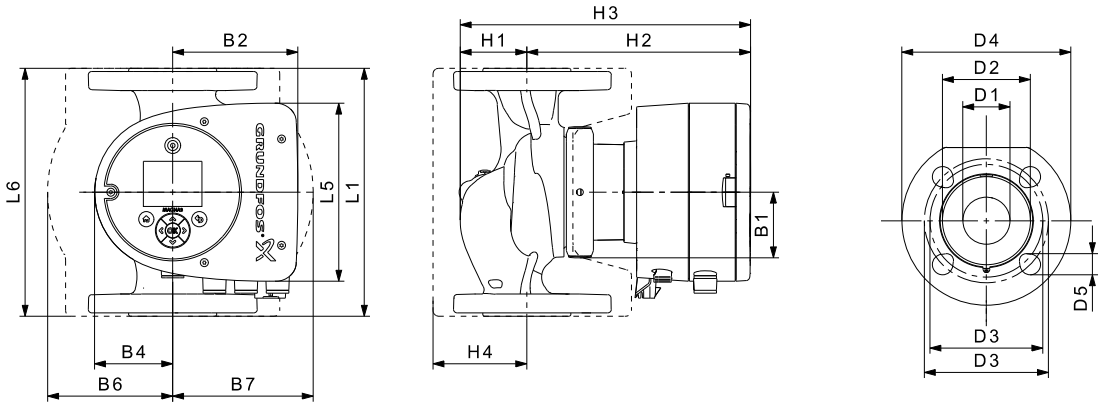


TM05 7985 1713

| Pump type | Dimensions [mm] | | | | | | | | | | | | | | | | |
|---|---|---|---|---|---|---|---|---|---|---|---|---|---|---|---|---|---|
| | L1 | L5 | L6 | B1 | B2 | B4 | B6 | B7 | H1 | H2 | H3 | H4 | D1 | D2 | D3 | D4 | D5 |
| MAGNA3 40-40 F (N) | 220 | 158 | 220 | 58 | 111 | 69 | 105 | 105 | 65 | 199 | 264 | 83 | 40 | 84 | 100/110 | 150 | 14/19 |

For product numbers, see page 139.

## MAGNA3 D 40-40 F

## 1 x 230 V, 50/60 Hz

Proportional pressure

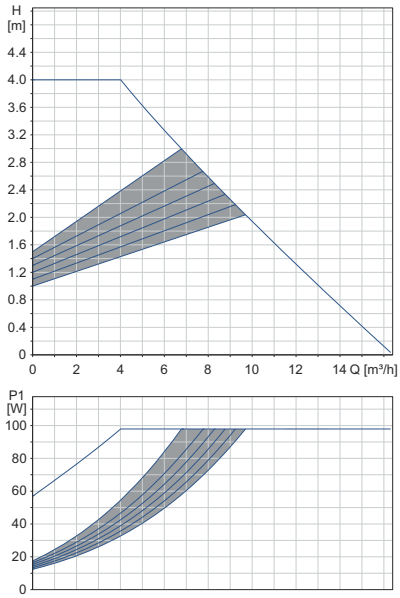


Constant pressure

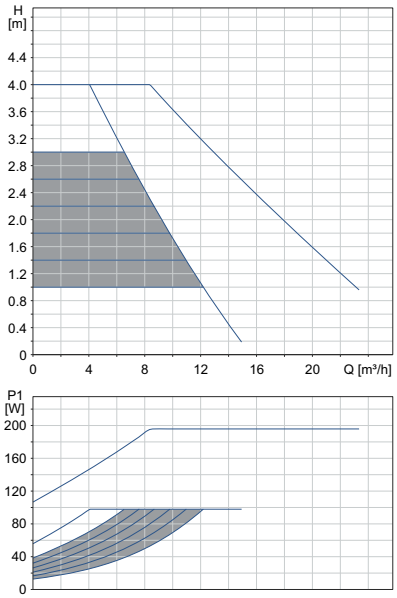


0-10 volt*

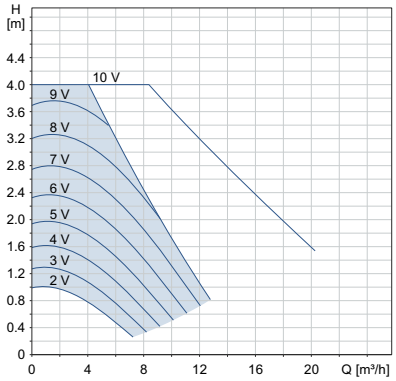


| Speed | P1 [W] | $I_1$ [A] |
|---|---|---|
| **Min.** | 12 | 0.11 |
| **Max.** | 105 | 0.87 |

The pump incorporates overload protection.

| Net weights [kg] | Gross weights [kg] | Ship. vol. [m³] |
|---|---|---|
| 19.9 | 20.6 | 0.04 |

* External setpoint influence shown with a set point of $H_{max}$

Connections: See *Pipe connections*, page 134.

System pressure: Max. 1.0 MPa (10 bar).
Also available as max. 1.6 MPa (16 bar).

Liquid temperature: -10 to +110 °C (TF 110).

Specific EEI: 0.19.

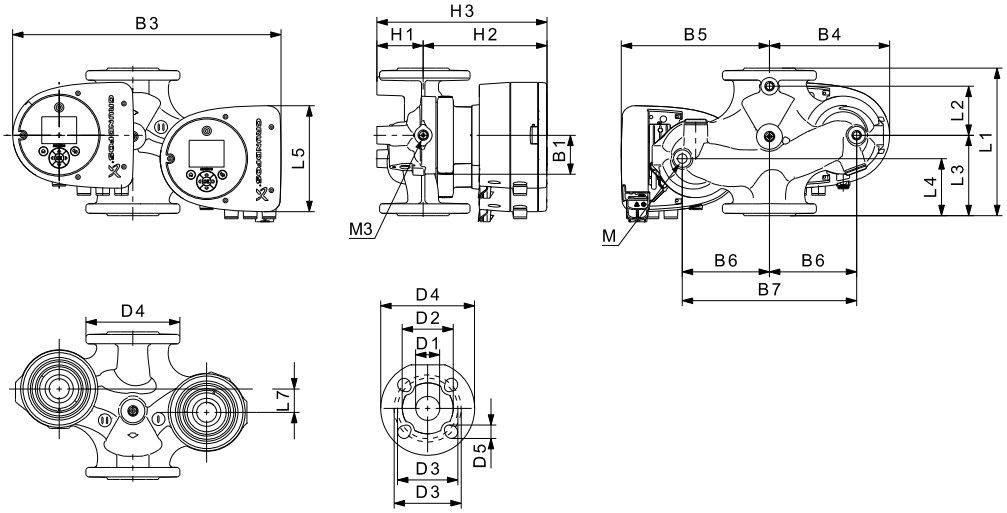


TM05 7986 1713

| Pump type | Dimensions [mm] | | | | | | | | | | | | | | | | | | | | | Rp |
|---|---|---|---|---|---|---|---|---|---|---|---|---|---|---|---|---|---|---|---|---|---|---|
| | L1 | L2 | L3 | L4 | L5 | L7 | B1 | B3 | B4 | B5 | B6 | B7 | H1 | H2 | H3 | D1 | D2 | D3 | D4 | D5 | M | M3 |
| MAGNA3 D 40-40 F | 220 | 53 | 140 | 60 | 158 | 15 | 58 | 452 | 211 | 241 | 130 | 260 | 76 | 199 | 275 | 40 | 84 | 100/110 | 150 | 14/19 | 12 | 1/4 |

For product numbers, see page 139.

## MAGNA3 40-60 F (N)

**1 x 230 V, 50/60 Hz**

Proportional pressure

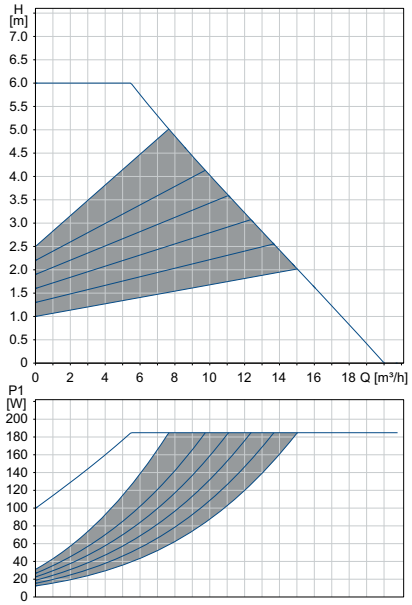


Constant pressure

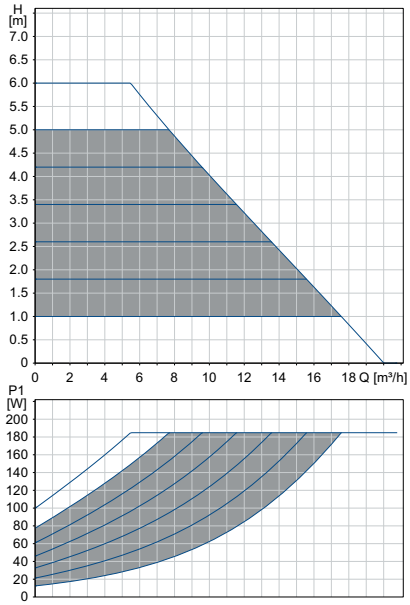


0-10 volt*

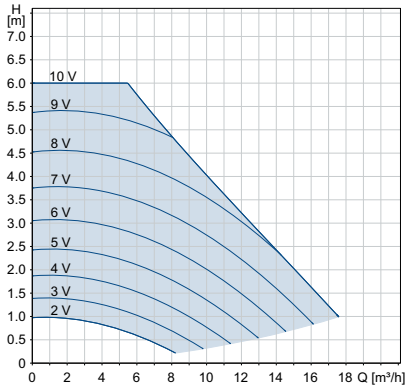


| Speed | P1 [W] | $I_1$ [A] |
|---|---|---|
| **Min.** | 12 | 0.11 |
| **Max.** | 194 | 1.58 |

The pump incorporates overload protection.

| Net weights [kg] | Gross weights [kg] | Ship. vol. [m³] |
|---|---|---|
| 9.9 | 10.4 | 0.02 |

* External setpoint influence shown with a set point of $H_{max}$

Connections: See *Pipe connections*, page 134.

System pressure: Max. 1.0 MPa (10 bar).
Also available as max. 1.6 MPa (16 bar).

Liquid temperature: -10 to +110 °C (TF 110).

Also available with: Stainless-steel pump housing, type N.

Specific EEI: 0.19.

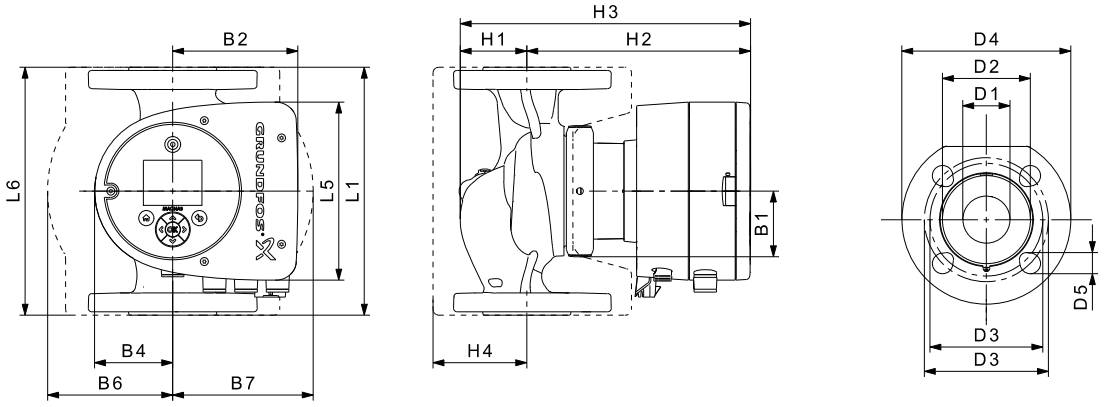


| Pump type | Dimensions [mm] | | | | | | | | | | | | | | | | |
|---|---|---|---|---|---|---|---|---|---|---|---|---|---|---|---|---|---|
| | L1 | L5 | L6 | B1 | B2 | B4 | B6 | B7 | H1 | H2 | H3 | H4 | D1 | D2 | D3 | D4 | D5 |
| MAGNA3 40-60 F (N) | 220 | 158 | 220 | 58 | 111 | 69 | 105 | 105 | 65 | 199 | 264 | 83 | 40 | 84 | 100/110 | 150 | 14/19 |

For product numbers, see page 139.

## MAGNA3 D 40-60 F

**1 x 230 V, 50/60 Hz**

Proportional pressure

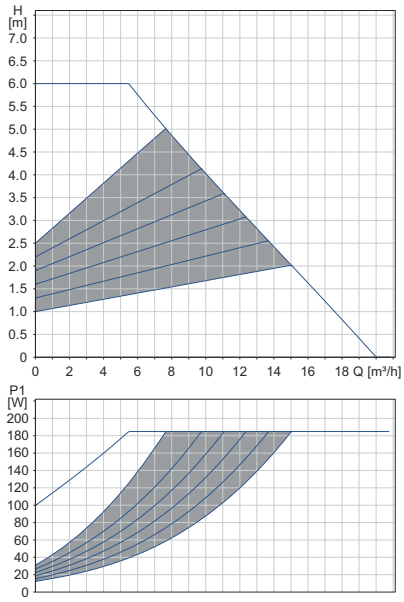


Constant pressure

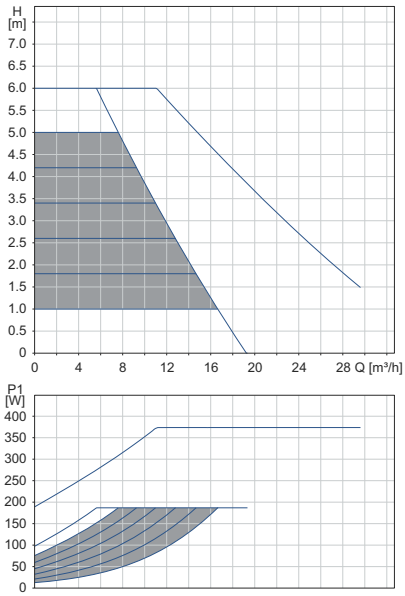


0-10 volt*

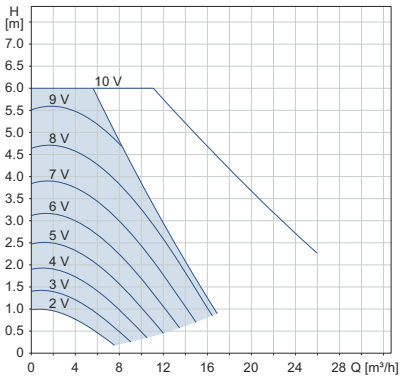


| Speed | P1 [W] | $I_1$ [A] |
|---|---|---|
| **Min.** | 12 | 0.11 |
| **Max.** | 196 | 1.55 |

The pump incorporates overload protection.

| Net weights [kg] | Gross weights [kg] | Ship. vol. [m³] |
|---|---|---|
| 19.9 | 20.6 | 0.04 |

* External setpoint influence shown with a set point of $H_{max}$

Connections: See *Pipe connections*, page 134.

System pressure: Max. 1.0 MPa (10 bar).
Also available as max. 1.6 MPa (16 bar).

Liquid temperature: -10 to +110 °C (TF 110).

Specific EEI: 0.19.

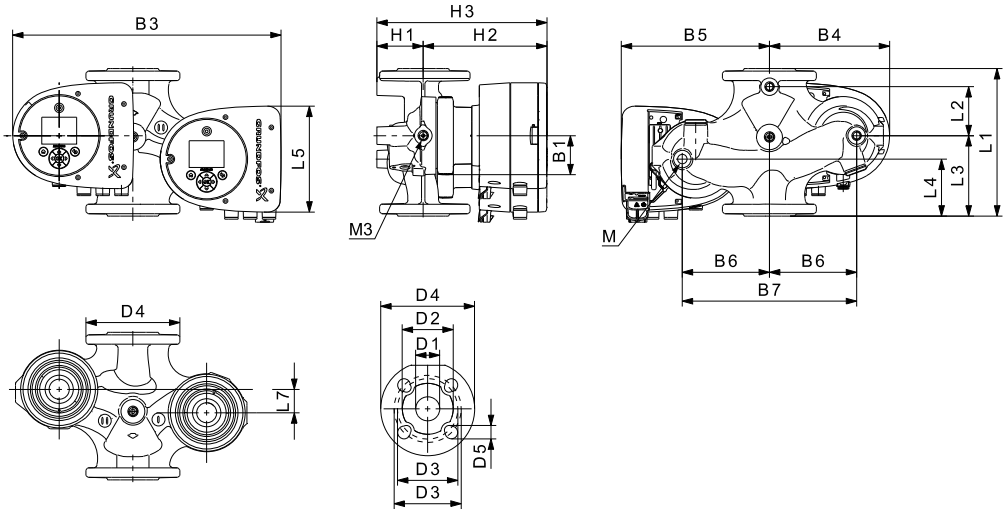


TM05 7986 1713

| Pump type | Dimensions [mm] | | | | | | | | | | | | | | | | | | | | | Rp |
|---|---|---|---|---|---|---|---|---|---|---|---|---|---|---|---|---|---|---|---|---|---|---|
| | L1 | L2 | L3 | L4 | L5 | L7 | B1 | B3 | B4 | B5 | B6 | B7 | H1 | H2 | H3 | D1 | D2 | D3 | D4 | D5 | M | M3 |
| MAGNA3 D 40-60 F | 220 | 53 | 140 | 60 | 158 | 15 | 58 | 452 | 211 | 241 | 130 | 260 | 76 | 199 | 275 | 40 | 84 | 100/110 | 150 | 14/19 | 12 | 1/4 |

For product numbers, see page 139.

## MAGNA3 40-80 F (N)

**1 x 230 V, 50/60 Hz**

Proportional pressure | Constant pressure | 0-10 volt*

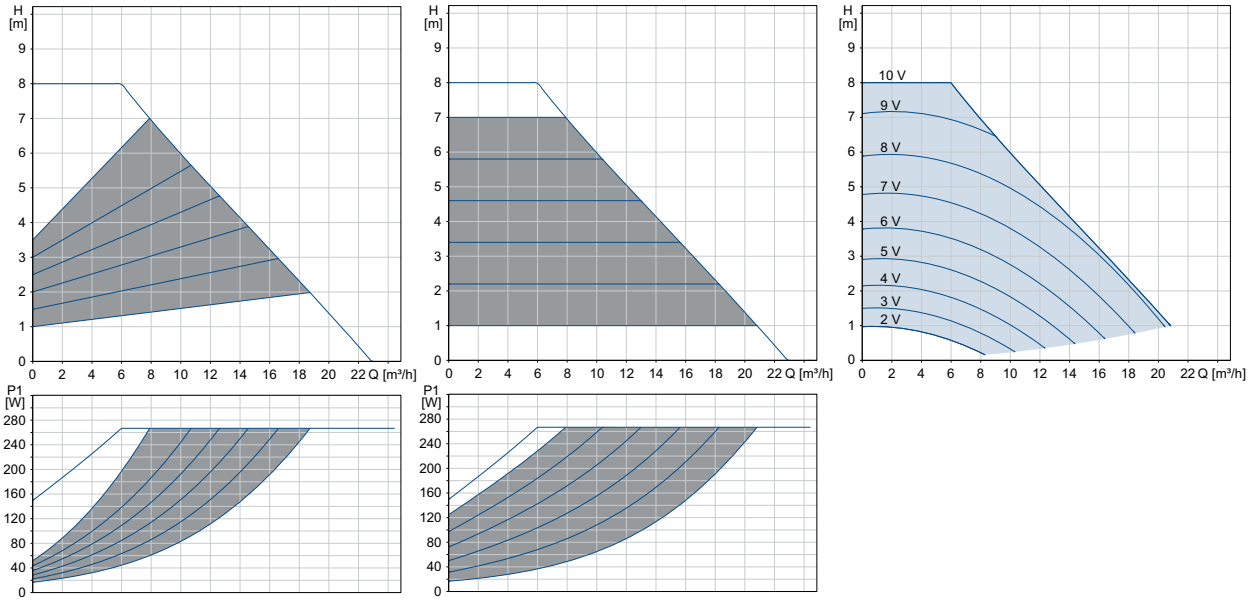


| Speed | P1 [W] | $I_1$ [A] |
|---|---|---|
| **Min.** | 17 | 0.19 |
| **Max.** | 278 | 1.26 |

The pump incorporates overload protection.

| Net weights [kg] | Gross weights [kg] | Ship. vol. [m³] |
|---|---|---|
| 15.9 | 18.7 | 0.04 |

* External setpoint influence shown with a set point of $H_{max}$

Connections: See *Pipe connections*, page 134.

System pressure: Max. 1.0 MPa (10 bar). Also available as max. 1.6 MPa (16 bar).

Liquid temperature: -10 to +110 °C (TF 110).

Also available with: Stainless-steel pump housing, type N.

Specific EEI: 0.19.

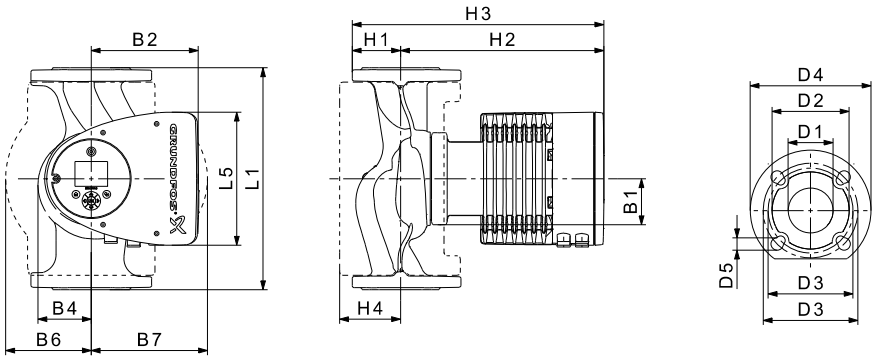


TM05 2204 3612

| Pump type | Dimensions [mm] | | | | | | | | | | | | | | | |
|---|---|---|---|---|---|---|---|---|---|---|---|---|---|---|---|---|
| | L1 | L5 | B1 | B2 | B4 | B6 | B7 | H1 | H2 | H3 | H4 | D1 | D2 | D3 | D4 | D5 |
| MAGNA3 40-80 F (N) | 220 | 204 | 84 | 164 | 73 | 106 | 128 | 65 | 304 | 369 | 83 | 40 | 84 | 100/110 | 150 | 14/19 |

For product numbers, see page 139.

## MAGNA3 D 40-80 F

**1 x 230 V, 50/60 Hz**

Proportional pressure

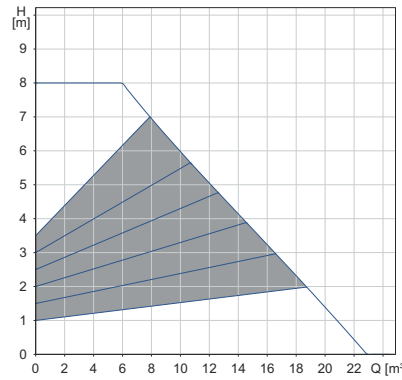


Constant pressure

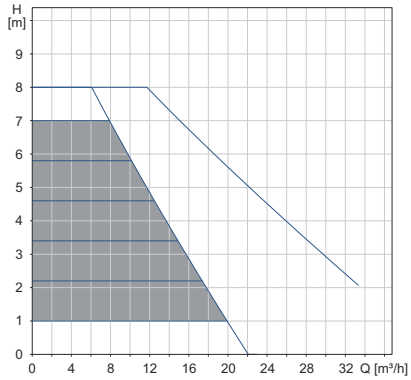


0-10 volt*

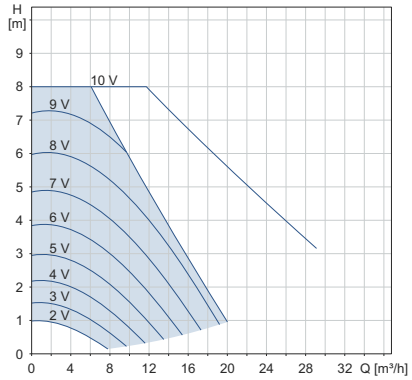


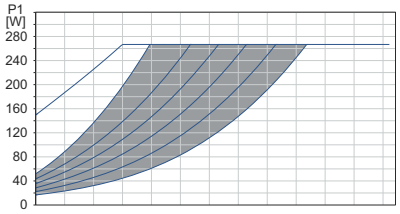


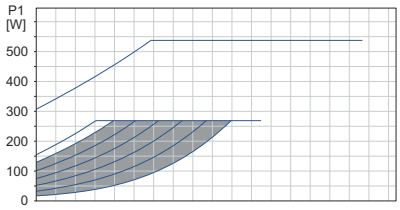


| Speed | P1 [W] | $I_1$ [A] |
|---|---|---|
| **Min.** | 17 | 0.19 |
| **Max.** | 279 | 1.24 |

The pump incorporates overload protection.

| Net weights [kg] | Gross weights [kg] | Ship. vol. [m³] |
|---|---|---|
| 32.6 | 32.8 | 0.04 |

* External setpoint influence shown with a set point of $H_{max}$

Connections: See *Pipe connections*, page 134.

System pressure: Max. 1.0 MPa (10 bar). Also available as max. 1.6 MPa (16 bar).

Liquid temperature: -10 to +110 °C (TF 110).

Specific EEI: 0.20.

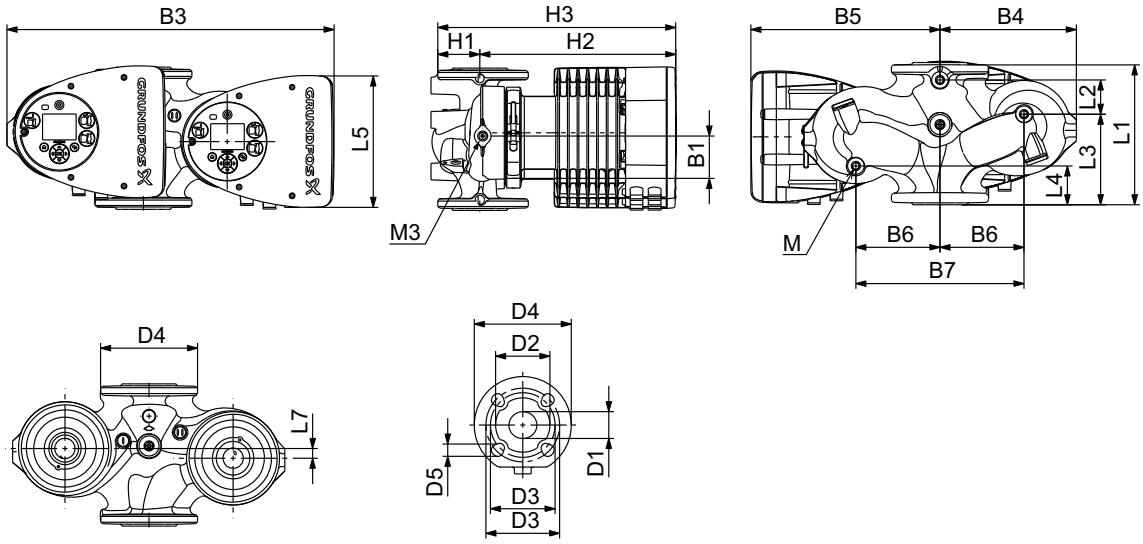


| Pump type | Dimensions [mm] | | | | | | | | | | | | | | | | | | | | | |
|---|---|---|---|---|---|---|---|---|---|---|---|---|---|---|---|---|---|---|---|---|---|---|
| | L1 | L2 | L3 | L4 | L5 | L7 | B1 | B3 | B4 | B5 | B6 | B7 | H1 | H2 | H3 | D1 | D2 | D3 | D4 | D5 | M | M3 |
| MAGNA3 D 40-80 F | 220 | 53 | 140 | 60 | 204 | 15 | 84 | 502 | 210 | 294 | 130 | 260 | 76 | 303 | 379 | 40 | 84 | 100/110 | 150 | 14/19 | M12 | Rp 1/4 |

For product numbers, see page 139.

## MAGNA3 40-100 F (N)

**1 x 230 V, 50/60 Hz**

Proportional pressure

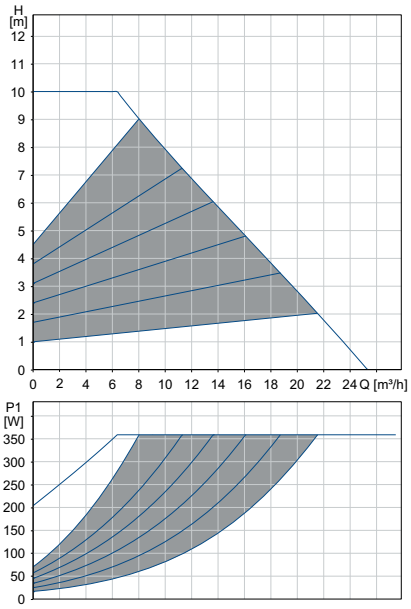


Constant pressure

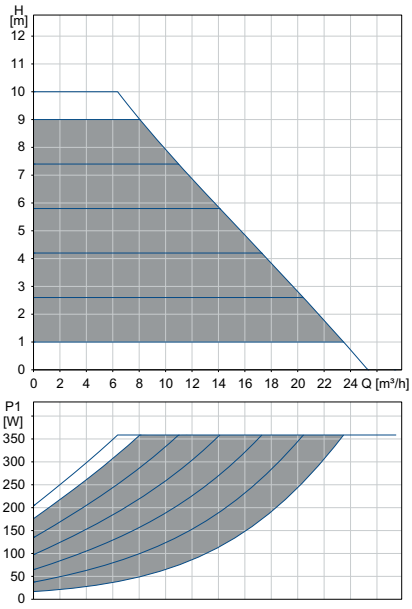


0-10 volt*

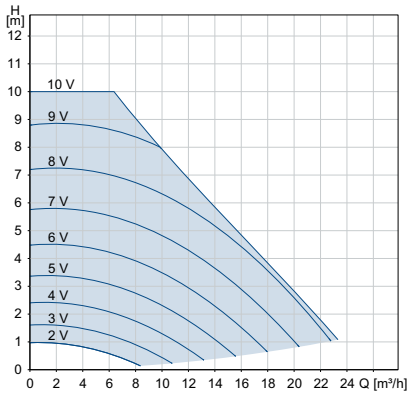


| Speed | P1 [W] | $I_1$ [A] |
|---|---|---|
| **Min.** | 18 | 0.20 |
| **Max.** | 371 | 1.66 |

The pump incorporates overload protection.

| Net weights [kg] | Gross weights [kg] | Ship. vol. [m³] |
|---|---|---|
| 15.9 | 18.7 | 0.04 |

* External setpoint influence shown with a set point of $H_{max}$

| | |
|---|---|
| Connections: | See *Pipe connections*, page 134. |
| System pressure: | Max. 1.0 MPa (10 bar).<br>Also available as max. 1.6 MPa (16 bar). |
| Liquid temperature: | -10 to +110 °C (TF 110). |
| Also available with: | Stainless-steel pump housing, type N. |
| Specific EEI: | 0.18. |

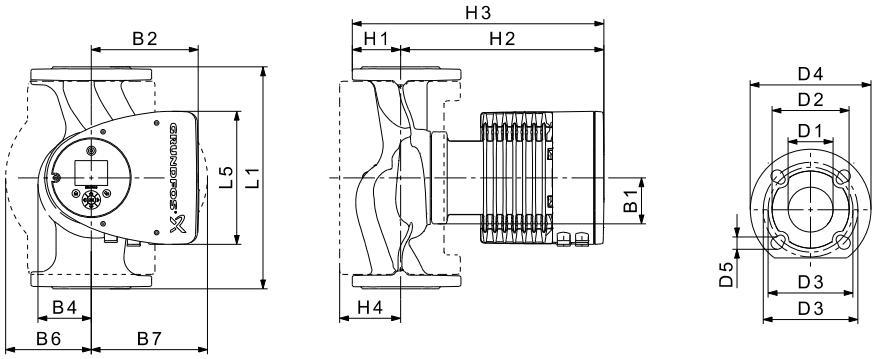


TM05 2204 3612

| Pump type | Dimensions [mm] | | | | | | | | | | | | | | | |
|---|---|---|---|---|---|---|---|---|---|---|---|---|---|---|---|---|
| | L1 | L5 | B1 | B2 | B4 | B6 | B7 | H1 | H2 | H3 | H4 | D1 | D2 | D3 | D4 | D5 |
| MAGNA3 40-100 F (N) | 220 | 204 | 84 | 164 | 73 | 106 | 128 | 65 | 304 | 369 | 83 | 40 | 84 | 100/110 | 150 | 14/19 |

For product numbers, see page 139.

## MAGNA3 D 40-100 F

**1 x 230 V, 50/60 Hz**

Proportional pressure

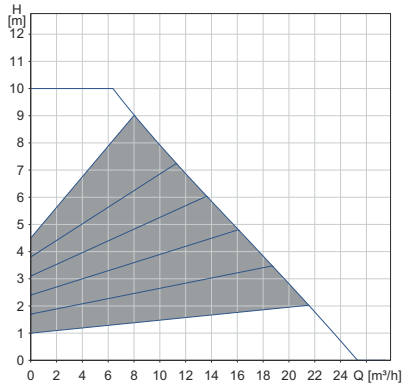


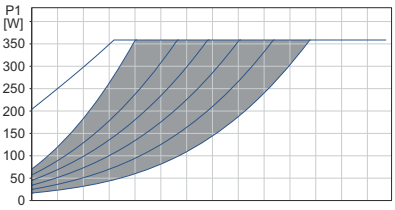


Constant pressure

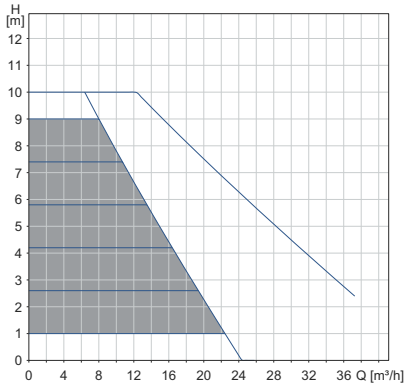


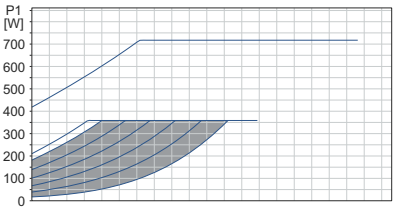


0-10 volt*

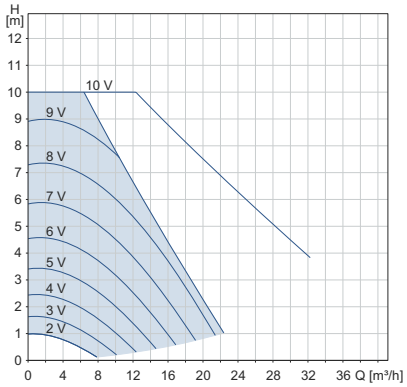


| Speed | P1 [W] | $I_1$ [A] |
|---|---|---|
| **Min.** | 18 | 0.19 |
| **Max.** | 371 | 1.64 |

The pump incorporates overload protection.

| Net weights [kg] | Gross weights [kg] | Ship. vol. [m³] |
|---|---|---|
| 32.6 | 32.8 | 0.04 |

* External setpoint influence shown with a set point of $H_{max}$

Connections: See *Pipe connections*, page 134.

System pressure: Max. 1.0 MPa (10 bar). Also available as max. 1.6 MPa (16 bar).

Liquid temperature: -10 to +110 °C (TF 110).

Specific EEI: 0.19.

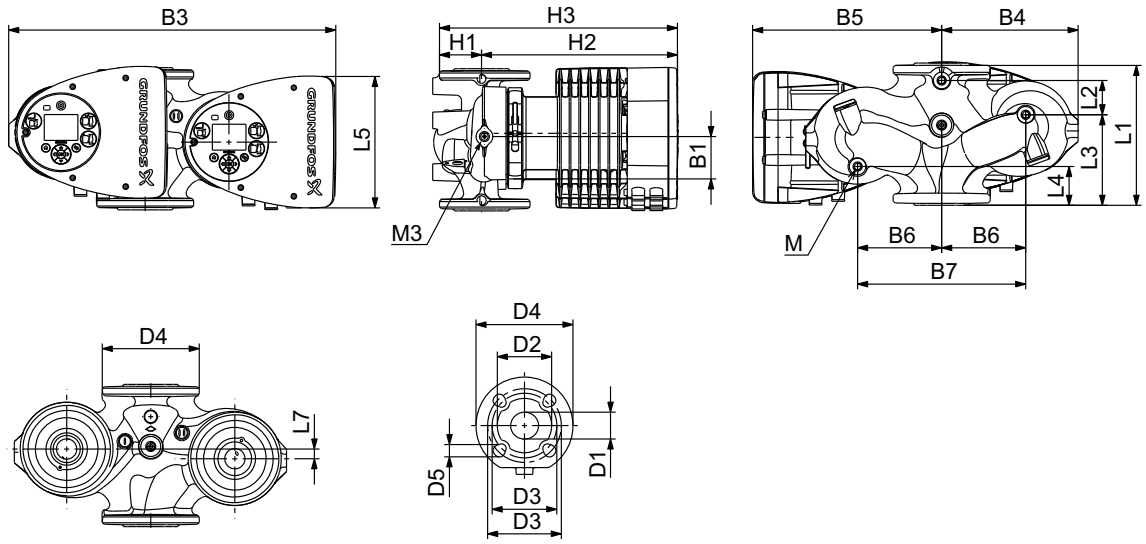


TM07 0042 3917

| Pump type | Dimensions [mm] | | | | | | | | | | | | | | | | | | | | | |
|---|---|---|---|---|---|---|---|---|---|---|---|---|---|---|---|---|---|---|---|---|---|---|
| | L1 | L2 | L3 | L4 | L5 | L7 | B1 | B3 | B4 | B5 | B6 | B7 | H1 | H2 | H3 | D1 | D2 | D3 | D4 | D5 | M | M3 |
| MAGNA3 D 40-100 F | 220 | 53 | 140 | 60 | 204 | 15 | 84 | 502 | 210 | 294 | 130 | 260 | 76 | 303 | 379 | 40 | 84 | 100/110 | 150 | 14/19 | M12 | Rp 1/4 |

For product numbers, see page 139.

## MAGNA3 40-120 F (N)

**1 x 230 V, 50/60 Hz**

Proportional pressure

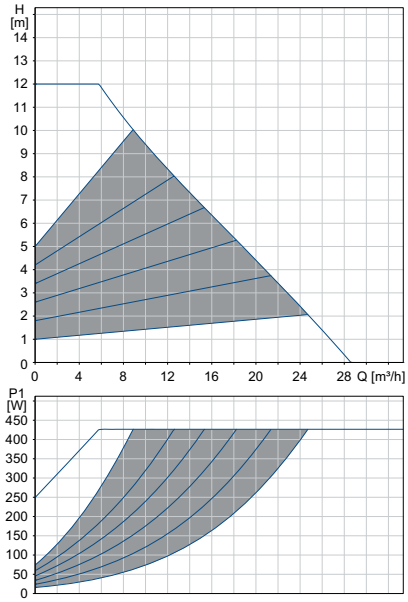


Constant pressure

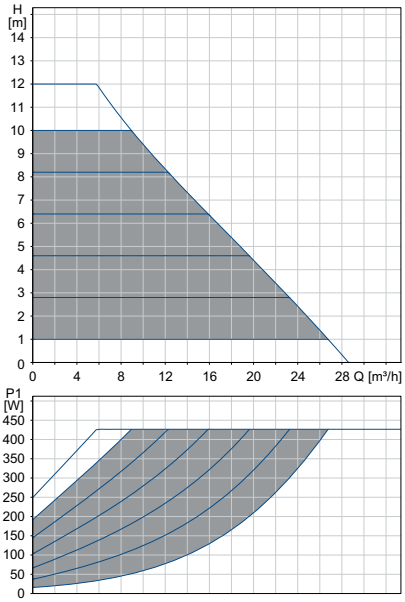


0-10 volt*

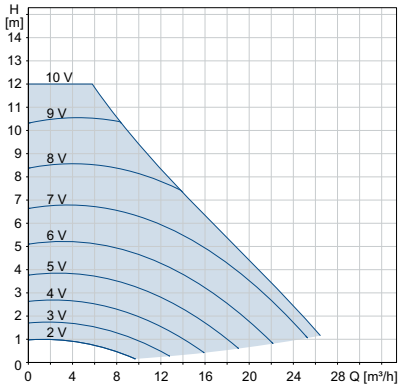


| Speed | P1 [W] | $I_1$ [A] |
|---|---|---|
| **Min.** | 17 | 0.19 |
| **Max.** | 440 | 1.96 |

The pump incorporates overload protection.

| Net weights [kg] | Gross weights [kg] | Ship. vol. [m³] |
|---|---|---|
| 15.5 | 18.2 | 0.04 |

* External setpoint influence shown with a set point of $H_{max}$

| | |
|---|---|
| Connections: | See *Pipe connections*, page 134. |
| System pressure: | Max. 1.0 MPa (10 bar).<br>Also available as max. 1.6 MPa (16 bar). |
| Liquid temperature: | -10 to +110 °C (TF 110). |
| Also available with: | Stainless-steel pump housing, type N. |
| Specific EEI: | 0.18. |

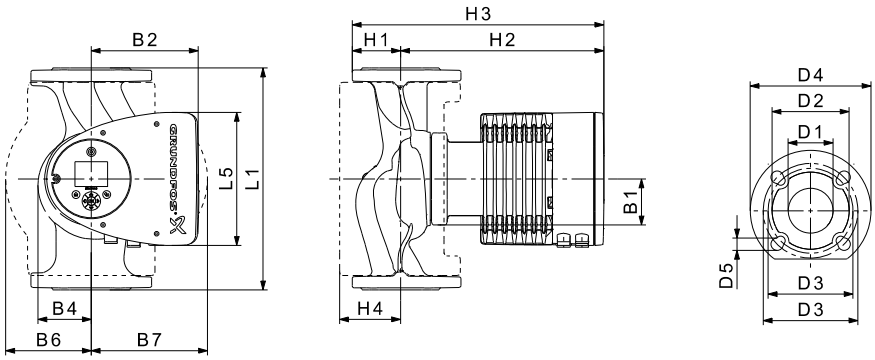


TM05 2204 3612

| Pump type | Dimensions [mm] | | | | | | | | | | | | | | | |
|---|---|---|---|---|---|---|---|---|---|---|---|---|---|---|---|---|
| | L1 | L5 | B1 | B2 | B4 | B6 | B7 | H1 | H2 | H3 | H4 | D1 | D2 | D3 | D4 | D5 |
| MAGNA3 40-120 F (N) | 250 | 204 | 84 | 164 | 73 | 106 | 128 | 65 | 304 | 369 | 83 | 40 | 84 | 100/110 | 150 | 14/19 |

For product numbers, see page 139.

## MAGNA3 D 40-120 F

**1 x 230 V, 50/60 Hz**

Proportional pressure

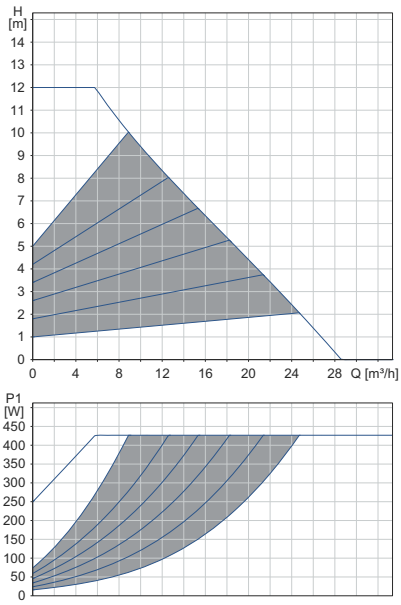


Constant pressure

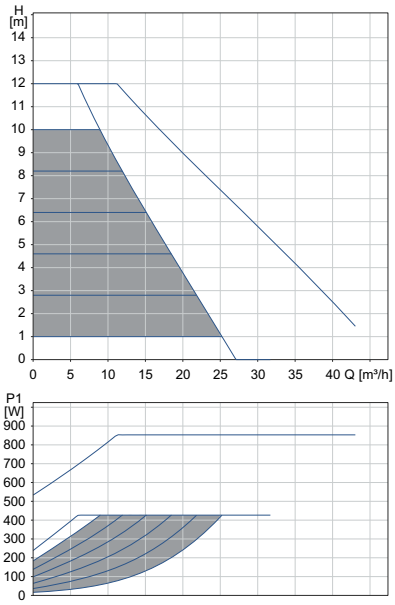


0-10 volt*

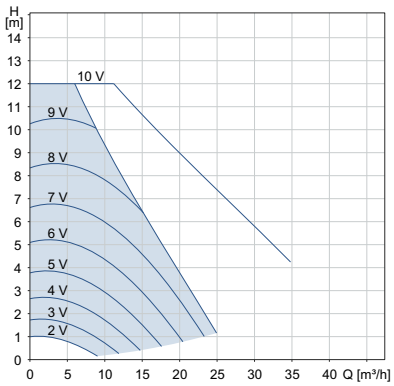


| Speed | P1 [W] | $I_1$ [A] |
|---|---|---|
| **Min.** | 16 | 0.18 |
| **Max.** | 441 | 1.91 |

The pump incorporates overload protection.

| Net weights [kg] | Gross weights [kg] | Ship. vol. [m³] |
|---|---|---|
| 31.7 | 31.9 | 0.04 |

* External setpoint influence shown with a set point of $H_{max}$

Connections: See *Pipe connections*, page 134.

System pressure: Max. 1.0 MPa (10 bar).
Also available as max. 1.6 MPa (16 bar).

Liquid temperature: -10 to +110 °C (TF 110).

Specific EEI: 0.19.

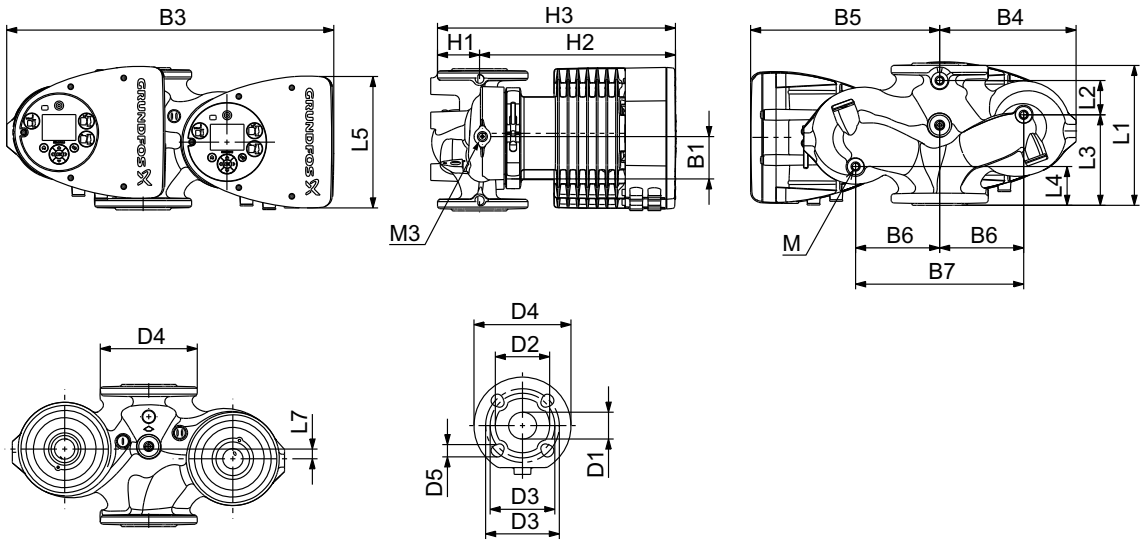


TM07 0042 3917

| Pump type | Dimensions [mm] | | | | | | | | | | | | | | | | | | | | |
|---|---|---|---|---|---|---|---|---|---|---|---|---|---|---|---|---|---|---|---|---|---|
| | L1 | L2 | L3 | L4 | L5 | B1 | B3 | B4 | B5 | B6 | B7 | H1 | H2 | H3 | D1 | D2 | D3 | D4 | D5 | M | M3 |
| MAGNA3 D 40-120 F | 250 | 58 | 155 | 75 | 204 | 84 | 512 | 220 | 294 | 130 | 260 | 69 | 303 | 372 | 40 | 84 | 100/110 | 150 | 14/19 | M12 | Rp 1/4 |

For product numbers, see page 139.

## MAGNA3 40-150 F (N)

**1 x 230 V, 50/60 Hz**

Proportional pressure

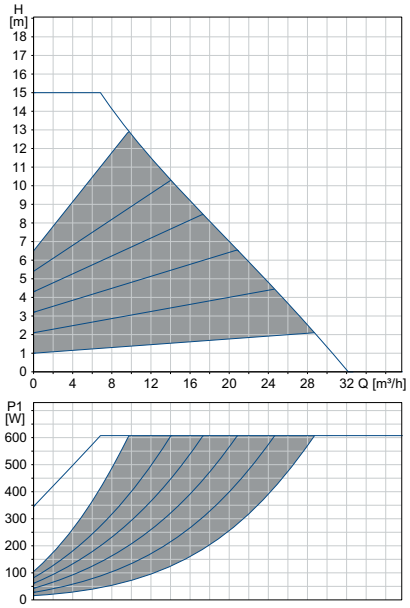


Constant pressure

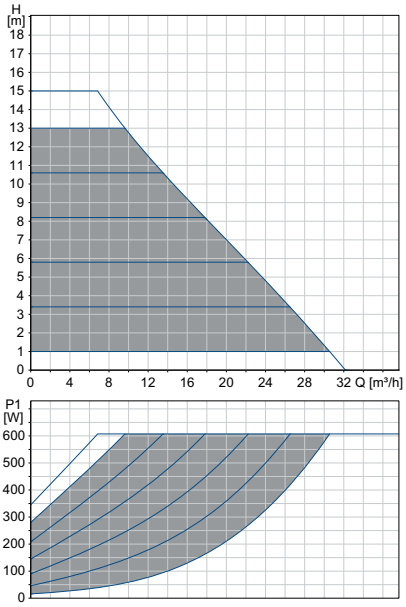


0-10 volt*

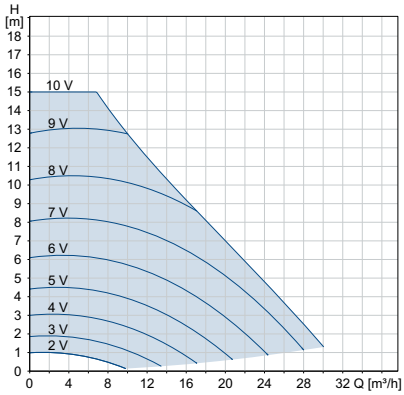


| Speed | P1 [W] | $I_1$ [A] |
|---|---|---|
| **Min.** | 17 | 0.19 |
| **Max.** | 626 | 2.78 |

The pump incorporates overload protection.

| Net weights [kg] | Gross weights [kg] | Ship. vol. [m³] |
|---|---|---|
| 15.5 | 18.2 | 0.04 |

* External setpoint influence shown with a set point of $H_{max}$

Connections: See *Pipe connections*, page 134.

System pressure: Max. 1.0 MPa (10 bar).
Also available as max. 1.6 MPa (16 bar).

Liquid temperature: -10 to +110 °C (TF 110).

Also available with: Stainless-steel pump housing, type N.

Specific EEI: 0.18.

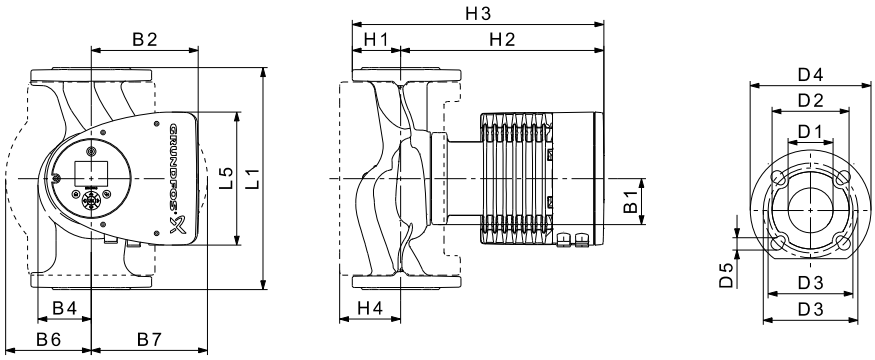


TM05 2204 3612

| Pump type | Dimensions [mm] | | | | | | | | | | | | | | | |
|---|---|---|---|---|---|---|---|---|---|---|---|---|---|---|---|---|
| | L1 | L5 | B1 | B2 | B4 | B6 | B7 | H1 | H2 | H3 | H4 | D1 | D2 | D3 | D4 | D5 |
| MAGNA3 40-150 F (N) | 250 | 204 | 84 | 164 | 73 | 106 | 128 | 65 | 304 | 369 | 83 | 40 | 84 | 100/110 | 150 | 14/19 |

For product numbers, see page 139.

## MAGNA3 D 40-150 F

**1 x 230 V, 50/60 Hz**

Proportional pressure

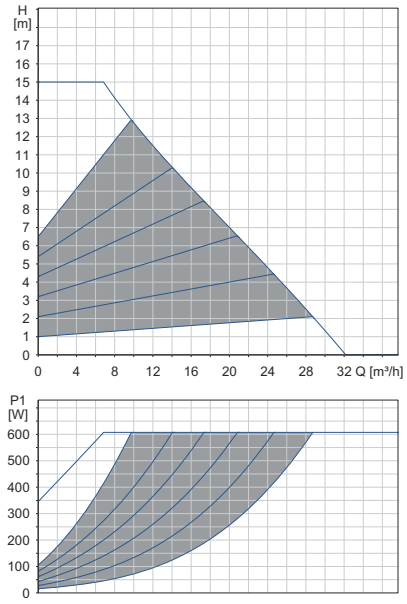


Constant pressure

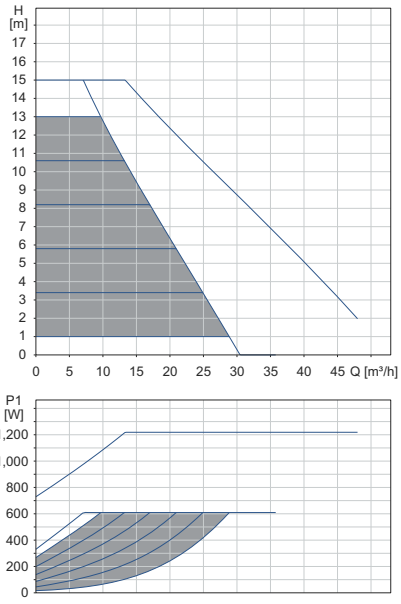


0-10 volt*

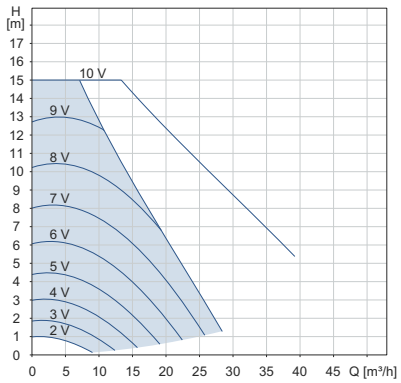


| Speed | P1 [W] | $I_1$ [A] |
|---|---|---|
| **Min.** | 16 | 0.18 |
| **Max.** | 627 | 2.75 |

The pump incorporates overload protection.

| Net weights [kg] | Gross weights [kg] | Ship. vol. [m³] |
|---|---|---|
| 31.7 | 31.9 | 0.04 |

* External setpoint influence shown with a set point of $H_{max}$

Connections: See *Pipe connections*, page 134.

System pressure: Max. 1.0 MPa (10 bar). Also available as max. 1.6 MPa (16 bar).

Liquid temperature: -10 to +110 °C (TF 110).

Specific EEI: 0.18.

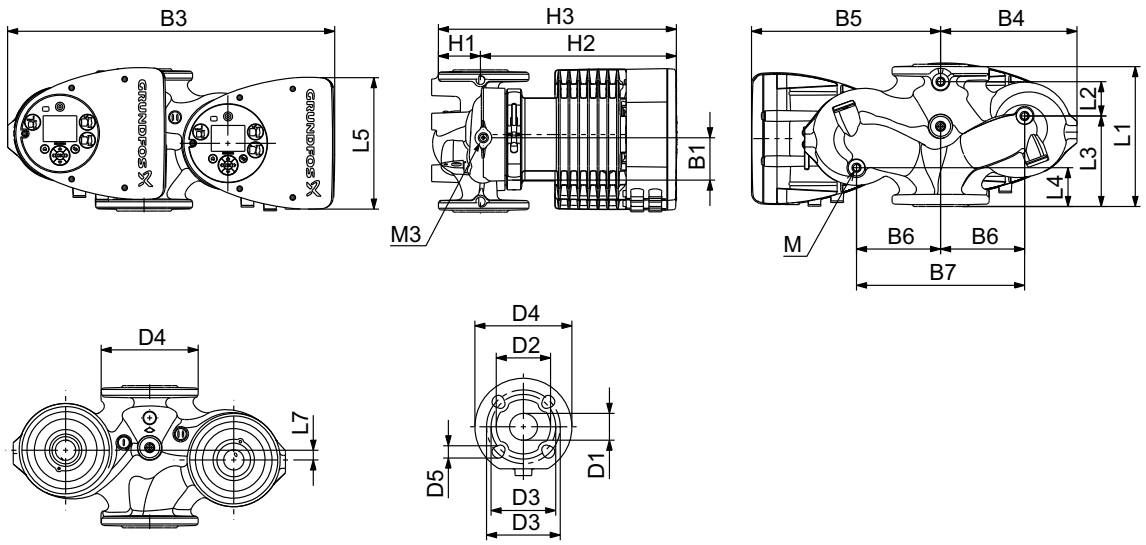


| Pump type | Dimensions [mm] | | | | | | | | | | | | | | | | | | | | |
|---|---|---|---|---|---|---|---|---|---|---|---|---|---|---|---|---|---|---|---|---|---|
| | L1 | L2 | L3 | L4 | L5 | B1 | B3 | B4 | B5 | B6 | B7 | H1 | H2 | H3 | D1 | D2 | D3 | D4 | D5 | M | M3 |
| MAGNA3 D 40-150 F | 250 | 58 | 155 | 75 | 204 | 84 | 512 | 220 | 294 | 130 | 260 | 69 | 303 | 372 | 40 | 84 | 100/110 | 150 | 14/19 | M12 | Rp 1/4 |

For product numbers, see page 139.

## MAGNA3 40-180 F (N)

**1 x 230 V, 50/60 Hz**

Proportional pressure

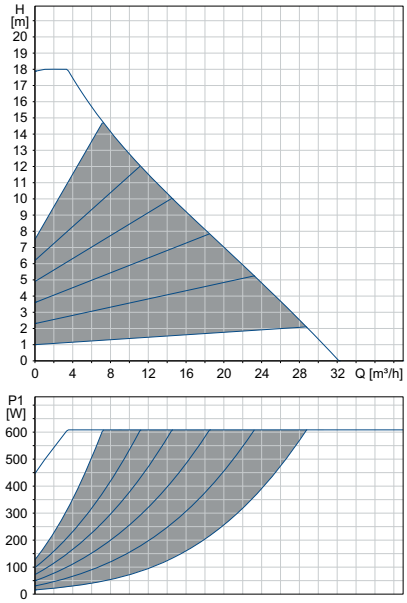


Constant pressure

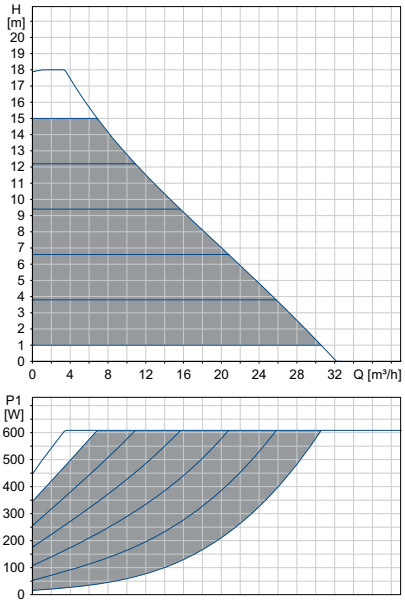


0-10 volt*

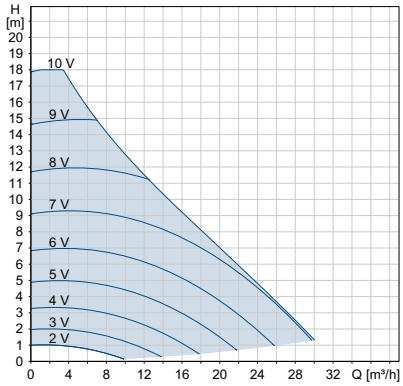


| Speed | P1 [W] | $I_1$ [A] |
|---|---|---|
| **Min.** | 16 | 0.18 |
| **Max.** | 627 | 2.78 |

The pump incorporates overload protection.

| Net weights [kg] | Gross weights [kg] | Ship. vol. [m³] |
|---|---|---|
| 15.5 | 18.7 | 0.04 |

* External setpoint influence shown with a set point of $H_{max}$

Connections: See *Pipe connections*, page 134.

System pressure: Max. 1.0 MPa (10 bar).
Also available as max. 1.6 MPa (16 bar).

Liquid temperature: -10 to +110 °C (TF 110).

Also available with: Stainless-steel pump housing, type N.

Specific EEI: 0.17.

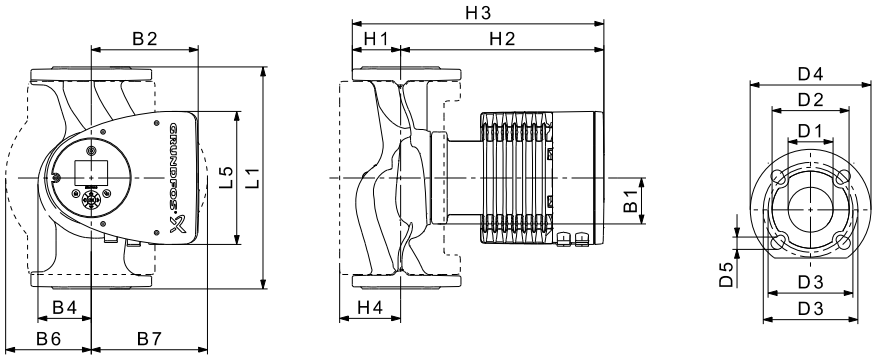


TM05 2204 3612

| Pump type | Dimensions [mm] | | | | | | | | | | | | | | | |
|---|---|---|---|---|---|---|---|---|---|---|---|---|---|---|---|---|
| | L1 | L5 | B1 | B2 | B4 | B6 | B7 | H1 | H2 | H3 | H4 | D1 | D2 | D3 | D4 | D5 |
| MAGNA3 40-180 F (N) | 250 | 204 | 84 | 164 | 73 | 106 | 128 | 65 | 304 | 369 | 83 | 40 | 84 | 100/110 | 150 | 14/19 |

For product numbers, see page 139.

## MAGNA3 D 40-180 F

## 1 x 230 V, 50/60 Hz

Proportional pressure

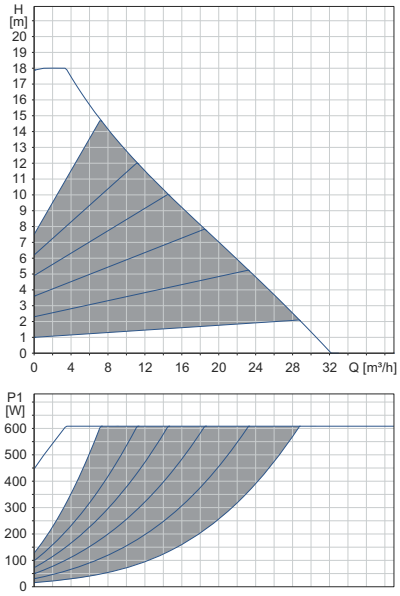


Constant pressure

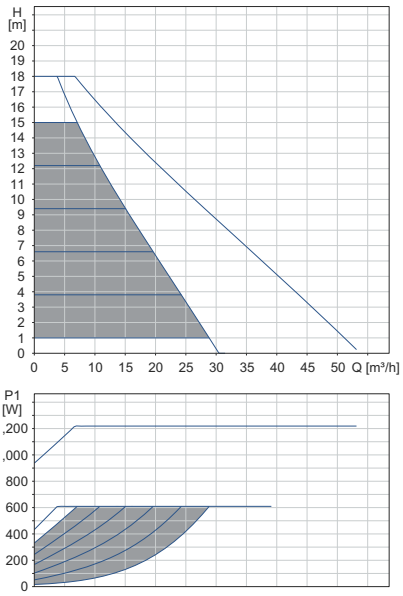


0-10 volt*

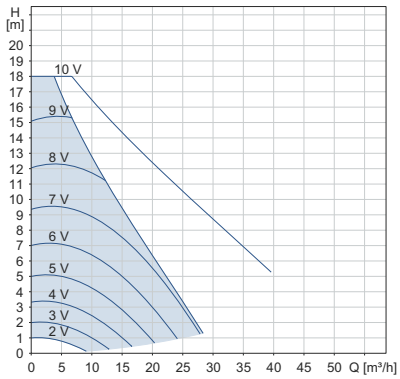


| Speed | P1 [W] | $I_1$ [A] |
|---|---|---|
| **Min.** | 16 | 0.18 |
| **Max.** | 627 | 2.75 |

The pump incorporates overload protection.

| Net weights [kg] | Gross weights [kg] | Ship. vol. [m³] |
|---|---|---|
| 31.7 | 31.9 | 0.04 |

* External setpoint influence shown with a set point of $H_{max}$

Connections: See *Pipe connections*, page 134.

System pressure: Max. 1.0 MPa (10 bar). Also available as max. 1.6 MPa (16 bar).

Liquid temperature: -10 to +110 °C (TF 110).

Specific EEI: 0.18.

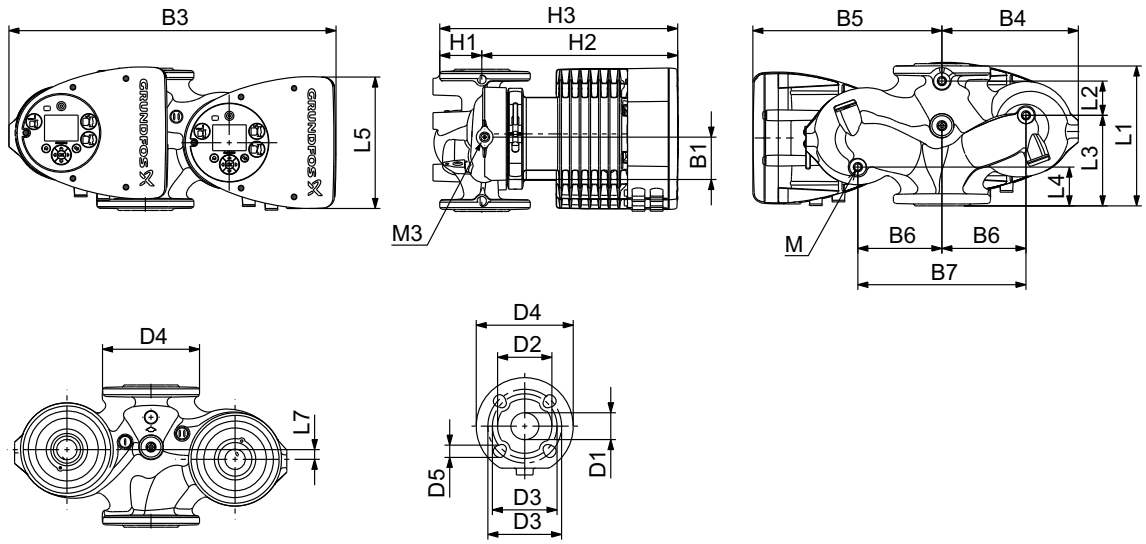


TM07 0042 3917

| Pump type | Dimensions [mm] | | | | | | | | | | | | | | | | | | | | |
|---|---|---|---|---|---|---|---|---|---|---|---|---|---|---|---|---|---|---|---|---|---|
| | L1 | L2 | L3 | L4 | L5 | B1 | B3 | B4 | B5 | B6 | B7 | H1 | H2 | H3 | D1 | D2 | D3 | D4 | D5 | M | M3 |
| MAGNA3 D 40-180 F | 250 | 58 | 155 | 75 | 204 | 84 | 512 | 220 | 294 | 130 | 260 | 69 | 303 | 372 | 40 | 84 | 100/110 | 150 | 14/19 | M12 | Rp 1/4 |

For product numbers, see page 139.

## MAGNA3 50-40 F (N)

## 1 x 230 V, 50/60 Hz

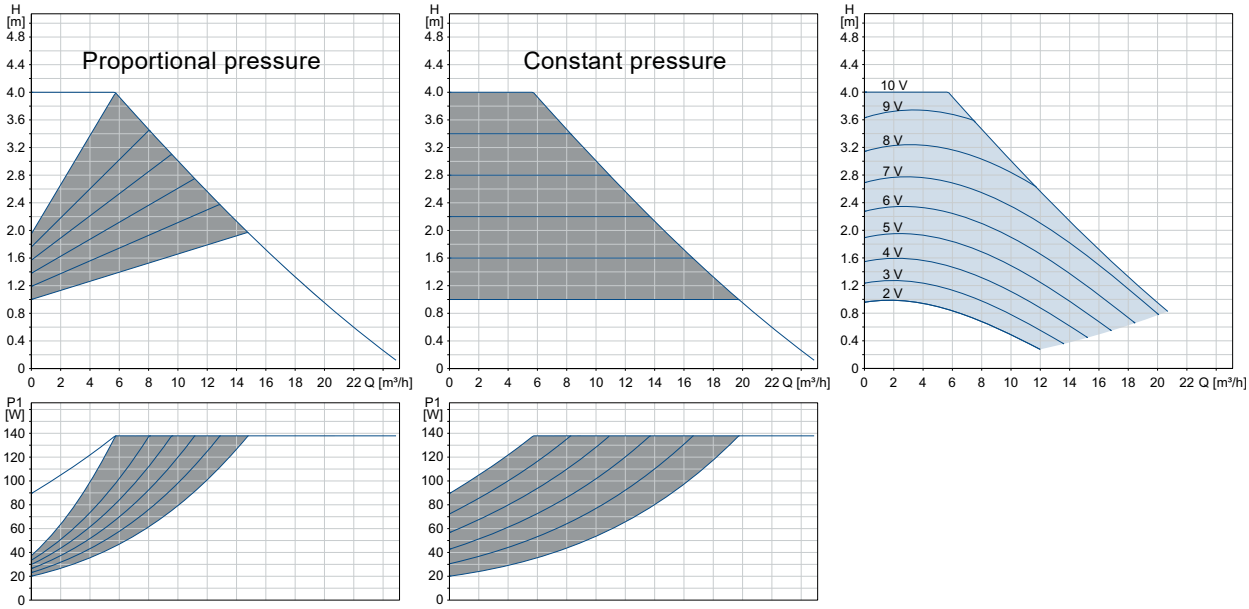


| Speed | P1 [W] | $I_1$ [A] |
|---|---|---|
| **Min.** | 20 | 0.22 |
| **Max.** | 146 | 0.72 |

The pump incorporates overload protection.

| Net weights [kg] | Gross weights [kg] | Ship. vol. [m³] |
|---|---|---|
| 17.0 | 20.4 | 0.05 |

* External setpoint influence shown with a set point of $H_{max}$

Connections: See *Pipe connections*, page 134.

System pressure: Max. 1.0 MPa (10 bar).
Also available as max. 1.6 MPa (16 bar).

Liquid temperature: -10 to +110 °C (TF 110).

Also available with: Stainless-steel pump housing, type N.

Specific EEI: 0.20.

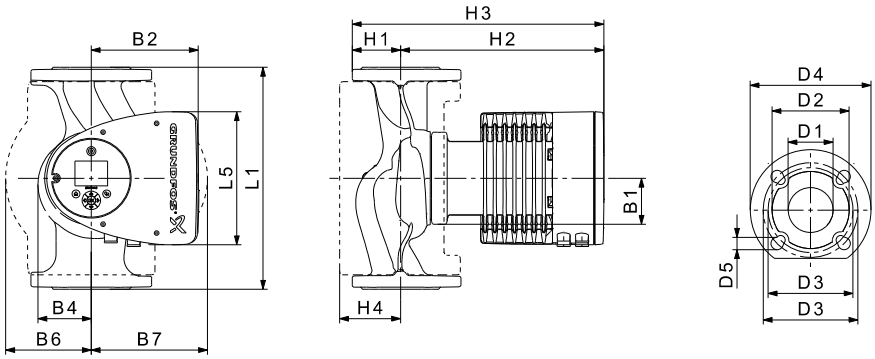


| Pump type | Dimensions [mm] | | | | | | | | | | | | | | | |
|---|---|---|---|---|---|---|---|---|---|---|---|---|---|---|---|---|
| | L1 | L5 | B1 | B2 | B4 | B6 | B7 | H1 | H2 | H3 | H4 | D1 | D2 | D3 | D4 | D5 |
| MAGNA3 50-40 F (N) | 240 | 204 | 84 | 164 | 73 | 127 | 127 | 71 | 304 | 374 | 97 | 50 | 102 | 110/125 | 165 | 14/19 |

For product numbers, see page 139.

## MAGNA3 D 50-40 F

**1 x 230 V, 50/60 Hz**

Proportional pressure

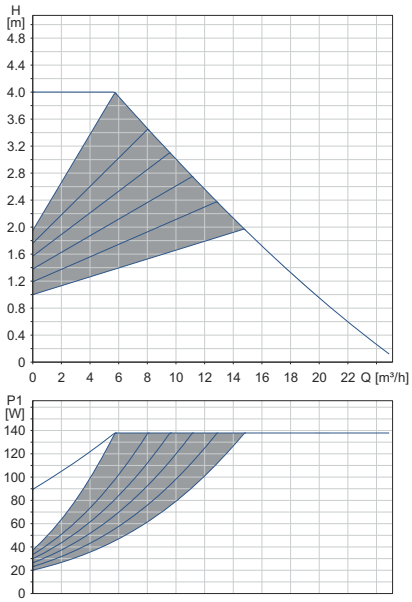


Constant pressure

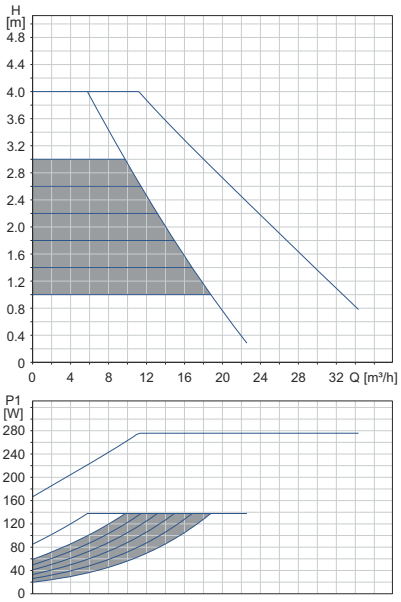


0-10 volt*

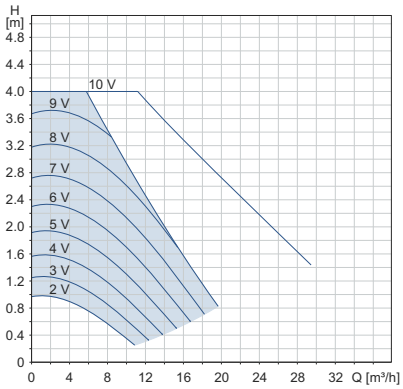


| Speed | P1 [W] | $I_1$ [A] |
|---|---|---|
| **Min.** | 20 | 0.22 |
| **Max.** | 146 | 0.68 |

The pump incorporates overload protection.

| Net weights [kg] | Gross weights [kg] | Ship. vol. [m³] |
|---|---|---|
| 33.0 | 41.8 | 0.05 |

* External setpoint influence shown with a set point of $H_{max}$

Connections: See *Pipe connections*, page 134.

System pressure: Max. 1.0 MPa (10 bar).
Also available as max. 1.6 MPa (16 bar).

Liquid temperature: -10 to +110 °C (TF 110).

Specific EEI: 0.20.

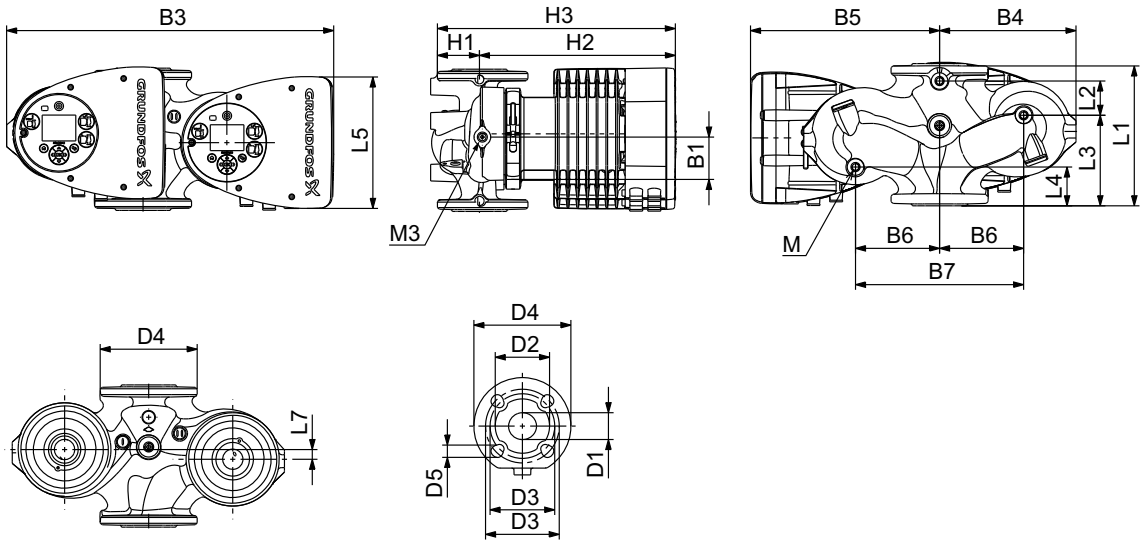


TM07 0042 3917

| Pump type | Dimensions [mm] | | | | | | | | | | | | | | | | | | | | |
|---|---|---|---|---|---|---|---|---|---|---|---|---|---|---|---|---|---|---|---|---|---|
| | L1 | L2 | L3 | L4 | L5 | L7 | B1 | B3 | B4 | B5 | B6 | B7 | H1 | H2 | H3 | D1 | D2 | D3 | D4 | D5 | M | M1 |
| MAGNA3 D 50-40 F | 240 | 48 | 160 | 45 | 204 | 45 | 84 | 515 | 221 | 294 | 130 | 260 | 75 | 304 | 379 | 50 | 102 | 110/125 | 165 | 14/19 | M12 | Rp 1/4 |

For product numbers, see page 139.

## MAGNA3 50-60 F (N)

**1 x 230 V, 50/60 Hz**

Proportional pressure | Constant pressure | 0-10 volt*

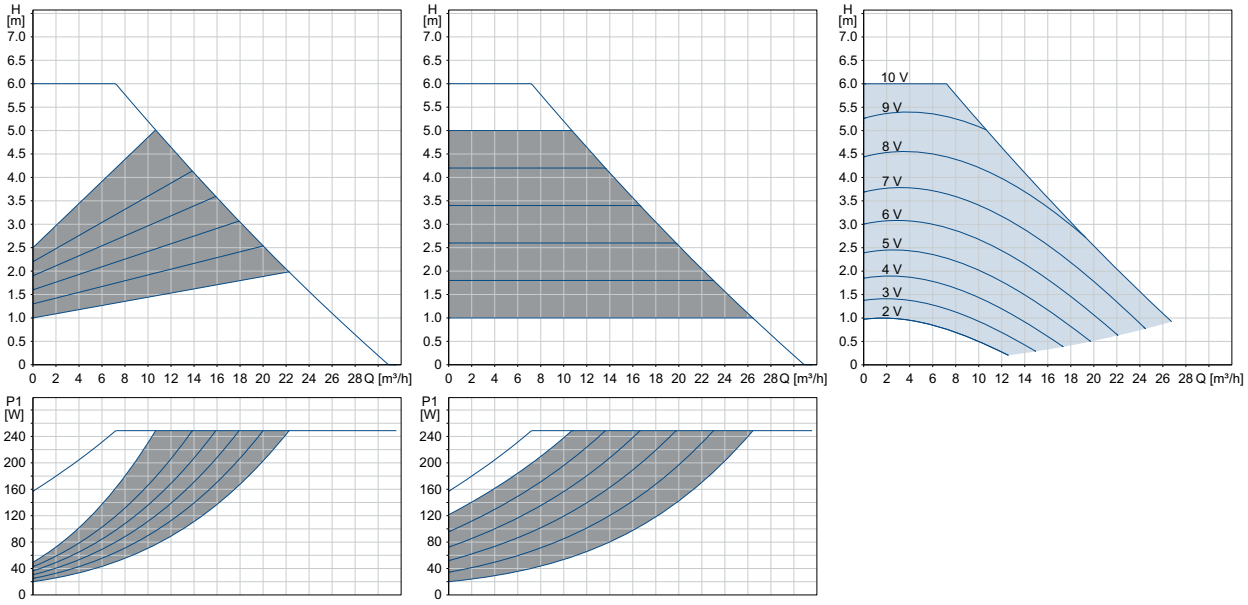


| Speed | P1 [W] | $I_1$ [A] |
|---|---|---|
| **Min.** | 21 | 0.23 |
| **Max.** | 259 | 1.18 |

The pump incorporates overload protection.

| Net weights [kg] | Gross weights [kg] | Ship. vol. [m³] |
|---|---|---|
| 17.0 | 20.4 | 0.05 |

* External setpoint influence shown with a set point of $H_{max}$

Connections: See *Pipe connections*, page 134.

System pressure: Max. 1.0 MPa (10 bar).
Also available as max. 1.6 MPa (16 bar).

Liquid temperature: -10 to +110 °C (TF 110).

Also available with: Stainless-steel pump housing, type N.

Specific EEI: 0.19.

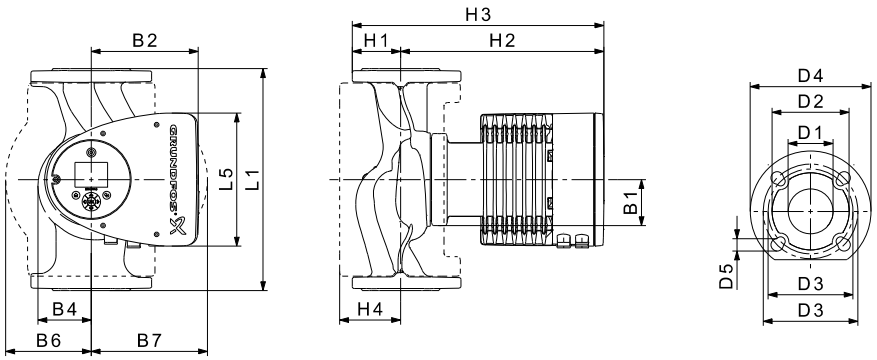


TM05 2204 3612

| Pump type | Dimensions [mm] | | | | | | | | | | | | | | | |
|---|---|---|---|---|---|---|---|---|---|---|---|---|---|---|---|---|
| | L1 | L5 | B1 | B2 | B4 | B6 | B7 | H1 | H2 | H3 | H4 | D1 | D2 | D3 | D4 | D5 |
| MAGNA3 50-60 F (N) | 240 | 204 | 84 | 164 | 73 | 127 | 127 | 71 | 304 | 374 | 97 | 50 | 102 | 110/125 | 165 | 14/19 |

For product numbers, see page 139.

## MAGNA3 D 50-60 F

**1 x 230 V, 50/60 Hz**

Proportional pressure

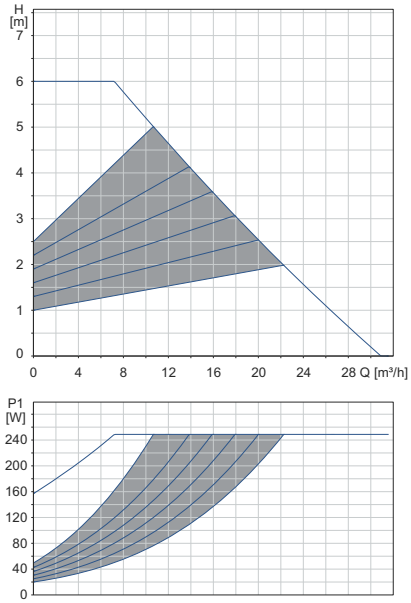


Constant pressure

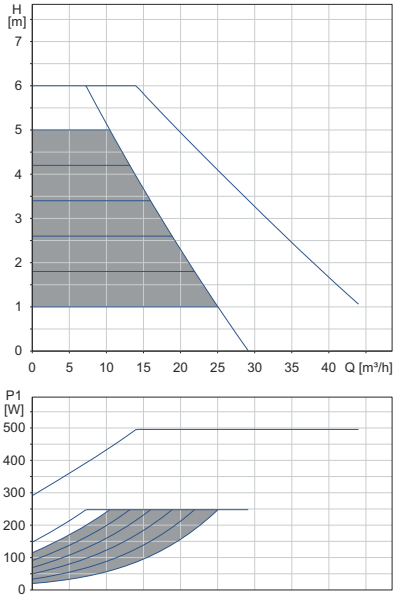


0-10 volt*

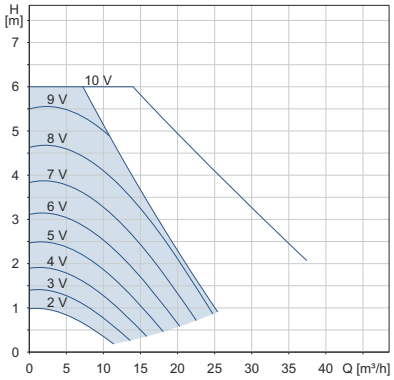


| Speed | P1 [W] | $I_1$ [A] |
|---|---|---|
| **Min.** | 20 | 0.21 |
| **Max.** | 258 | 1.15 |

The pump incorporates overload protection.

| Net weights [kg] | Gross weights [kg] | Ship. vol. [m³] |
|---|---|---|
| 33.0 | 41.8 | 0.05 |

* External setpoint influence shown with a set point of $H_{max}$

Connections: See *Pipe connections*, page 134.

System pressure: Max. 1.0 MPa (10 bar). Also available as max. 1.6 MPa (16 bar).

Liquid temperature: -10 to +110 °C (TF 110).

Specific EEI: 0.19.

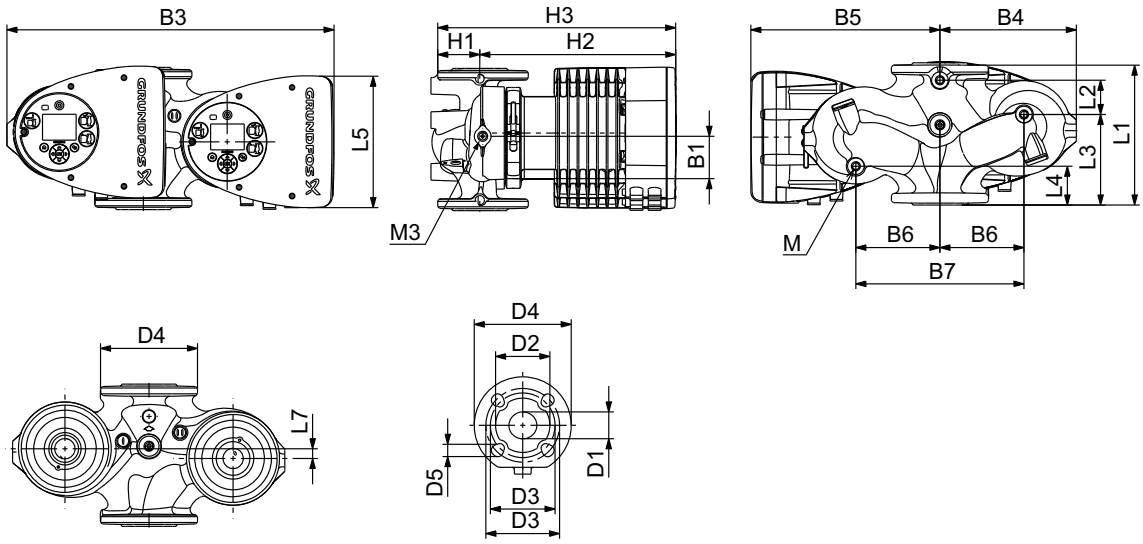


TM07 0042 3917

| Pump type | Dimensions [mm] | | | | | | | | | | | | | | | | | | | | | |
|---|---|---|---|---|---|---|---|---|---|---|---|---|---|---|---|---|---|---|---|---|---|---|
| | L1 | L2 | L3 | L4 | L5 | L7 | B1 | B3 | B4 | B5 | B6 | B7 | H1 | H2 | H3 | D1 | D2 | D3 | D4 | D5 | M | M3 |
| MAGNA3 D 50-60 F | 240 | 48 | 160 | 45 | 204 | 45 | 84 | 515 | 221 | 294 | 130 | 260 | 75 | 304 | 379 | 50 | 102 | 110/125 | 165 | 14/19 | M12 | Rp 1/4 |

For product numbers, see page 139.

## MAGNA3 50-80 F (N)

**1 x 230 V, 50/60 Hz**

Proportional pressure | Constant pressure | 0-10 volt*

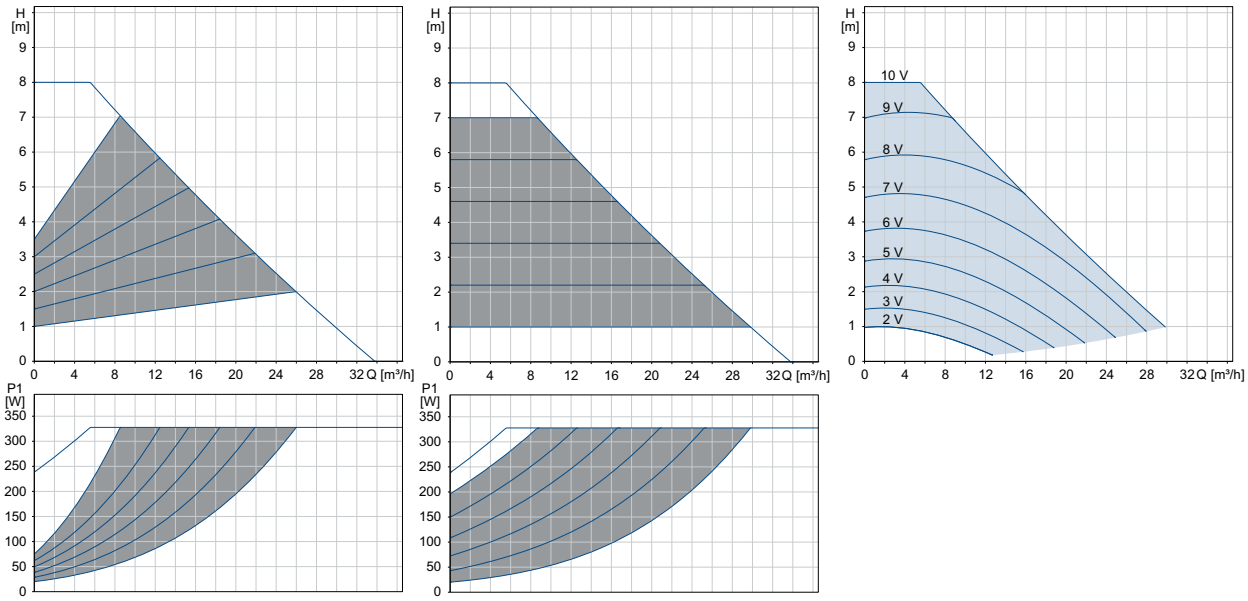


| Speed | P1 [W] | $I_1$ [A] |
|---|---|---|
| **Min.** | 21 | 0.22 |
| **Max.** | 339 | 1.53 |

The pump incorporates overload protection.

| Net weights [kg] | Gross weights [kg] | Ship. vol. [m³] |
|---|---|---|
| 17.0 | 20.4 | 0.05 |

* External setpoint influence shown with a set point of $H_{max}$

Connections: See *Pipe connections*, page 134.

System pressure: Max. 1.0 MPa (10 bar).
Also available as max. 1.6 MPa (16 bar).

Liquid temperature: -10 to +110 °C (TF 110).

Also available with: Stainless-steel pump housing, type N.

Specific EEI: 0.18.

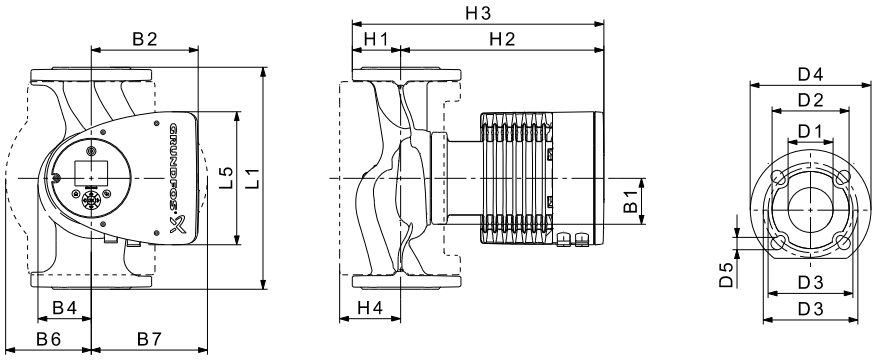


TM05 2204 3612

| Pump type | Dimensions [mm] | | | | | | | | | | | | | | | |
|---|---|---|---|---|---|---|---|---|---|---|---|---|---|---|---|---|
| | L1 | L5 | B1 | B2 | B4 | B6 | B7 | H1 | H2 | H3 | H4 | D1 | D2 | D3 | D4 | D5 |
| MAGNA3 50-80 F (N) | 240 | 204 | 84 | 164 | 73 | 127 | 127 | 71 | 304 | 374 | 97 | 50 | 102 | 110/125 | 165 | 14/19 |

For product numbers, see page 139.

## MAGNA3 D 50-80 F

**1 x 230 V, 50/60 Hz**

Proportional pressure

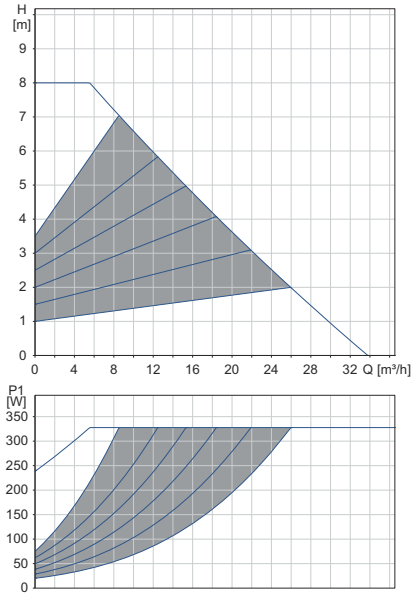


Constant pressure

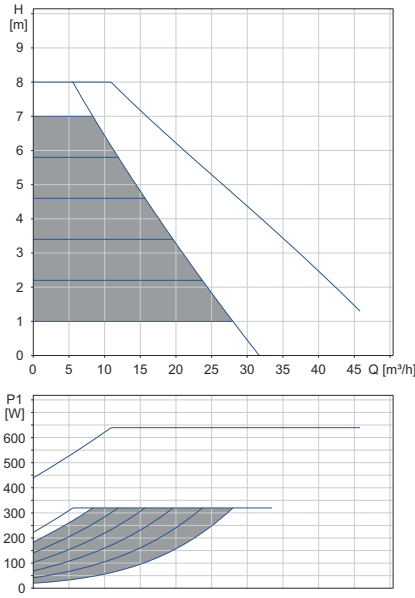


0-10 volt*

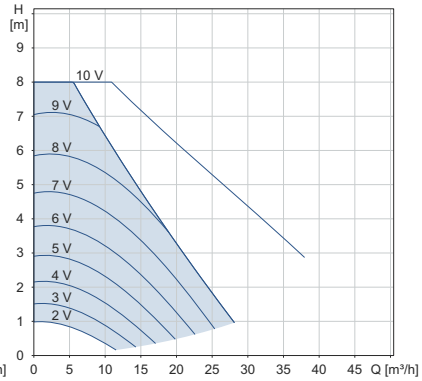


| Speed | P1 [W] | $I_1$ [A] |
|---|---|---|
| **Min.** | 21 | 0.22 |
| **Max.** | 332 | 1.48 |

The pump incorporates overload protection.

| Net weights [kg] | Gross weights [kg] | Ship. vol. [m³] |
|---|---|---|
| 33.0 | 41.8 | 0.05 |

* External setpoint influence shown with a set point of $H_{max}$

Connections: See *Pipe connections*, page 134.

System pressure: Max. 1.0 MPa (10 bar).
Also available as max. 1.6 MPa (16 bar).

Liquid temperature: -10 to +110 °C (TF 110).

Specific EEI: 0.19.

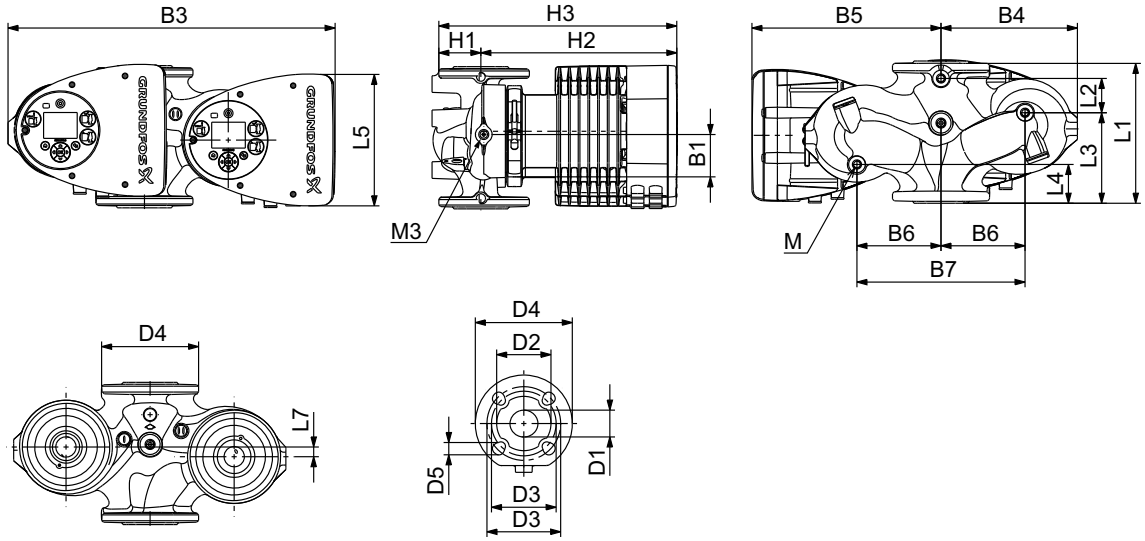


| Pump type | Dimensions [mm] | | | | | | | | | | | | | | | | | | | | | |
|---|---|---|---|---|---|---|---|---|---|---|---|---|---|---|---|---|---|---|---|---|---|---|
| | L1 | L2 | L3 | L4 | L5 | L7 | B1 | B3 | B4 | B5 | B6 | B7 | H1 | H2 | H3 | D1 | D2 | D3 | D4 | D5 | M | M3 |
| MAGNA3 D 50-80 F | 240 | 48 | 160 | 45 | 204 | 45 | 84 | 515 | 221 | 294 | 130 | 260 | 75 | 304 | 379 | 50 | 102 | 110/125 | 165 | 14/19 | M12 | Rp 1/4 |

For product numbers, see page 139.

## MAGNA3 50-100 F (N)

**1 x 230 V, 50/60 Hz**

Proportional pressure | Constant pressure | 0-10 volt*

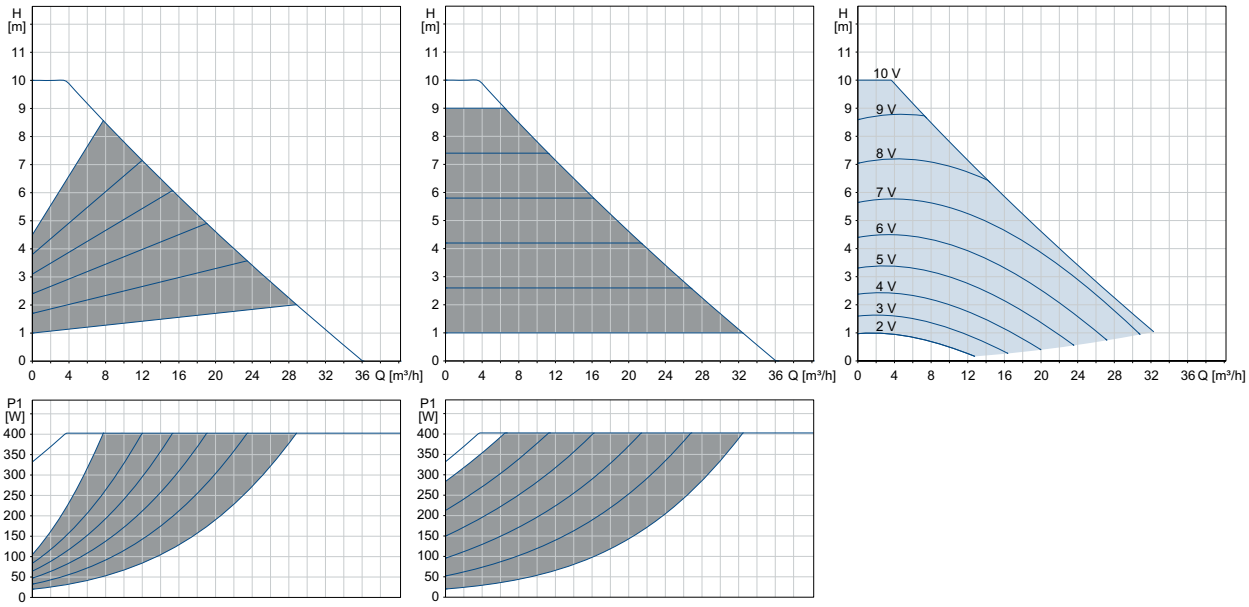


| Speed | P1 [W] | $I_1$ [A] |
|---|---|---|
| **Min.** | 21 | 0.22 |
| **Max.** | 416 | 1.86 |

The pump incorporates overload protection.

| Net weights [kg] | Gross weights [kg] | Ship. vol. [m³] |
|---|---|---|
| 17.6 | 21.1 | 0.05 |

* External setpoint influence shown with a set point of $H_{max}$

Connections: See *Pipe connections*, page 134.

System pressure: Max. 1.0 MPa (10 bar).
Also available as max. 1.6 MPa (16 bar).

Liquid temperature: -10 to +110 °C (TF 110).

Also available with: Stainless-steel pump housing, type N.

Specific EEI: 0.18.

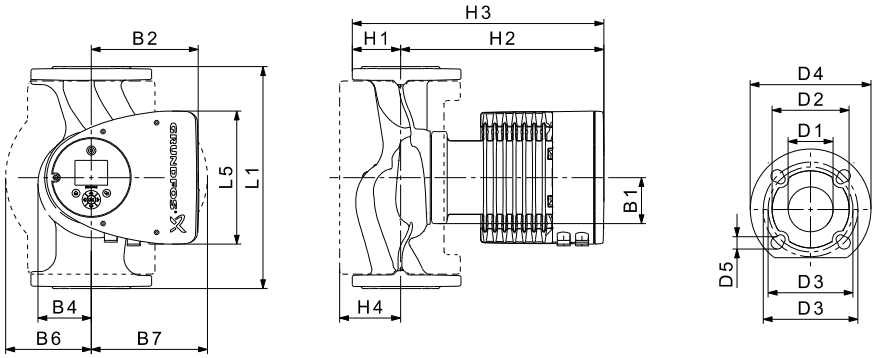


TM05 2204 3612

| Pump type | Dimensions [mm] | | | | | | | | | | | | | | | |
|---|---|---|---|---|---|---|---|---|---|---|---|---|---|---|---|---|
| | L1 | L5 | B1 | B2 | B4 | B6 | B7 | H1 | H2 | H3 | H4 | D1 | D2 | D3 | D4 | D5 |
| MAGNA3 50-100 F (N) | 280 | 204 | 84 | 164 | 73 | 127 | 127 | 72 | 304 | 376 | 97 | 50 | 102 | 110/125 | 165 | 14/19 |

For product numbers, see page 139.

## MAGNA3 D 50-100 F

**1 x 230 V, 50/60 Hz**

Proportional pressure

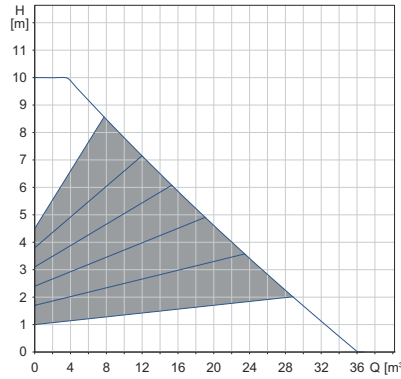


Constant pressure

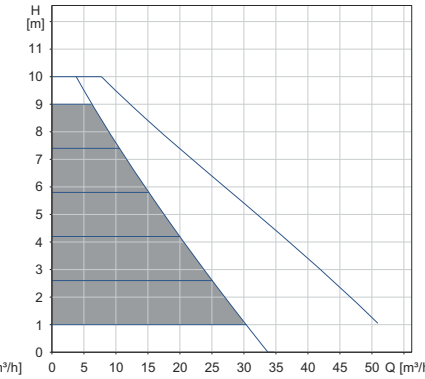


0-10 volt*

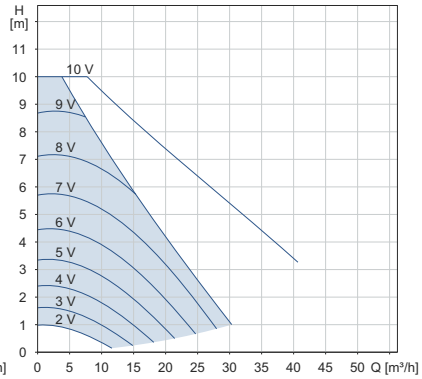


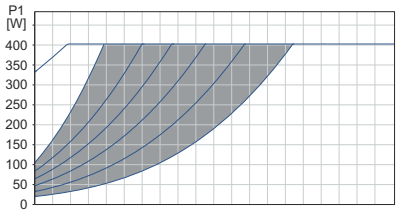


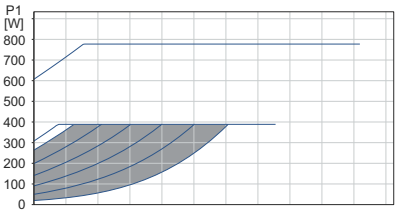


| Speed | P1 [W] | $I_1$ [A] |
|---|---|---|
| **Min.** | 20 | 0.21 |
| **Max.** | 402 | 1.77 |

The pump incorporates overload protection.

| Net weights [kg] | Gross weights [kg] | Ship. vol. [m³] |
|---|---|---|
| 33.3 | 42.1 | 0.05 |

* External setpoint influence shown with a set point of $H_{max}$

Connections: See *Pipe connections*, page 134.

System pressure: Max. 1.0 MPa (10 bar).
Also available as max. 1.6 MPa (16 bar).

Liquid temperature: -10 to +110 °C (TF 110).

Specific EEI: 0.19.

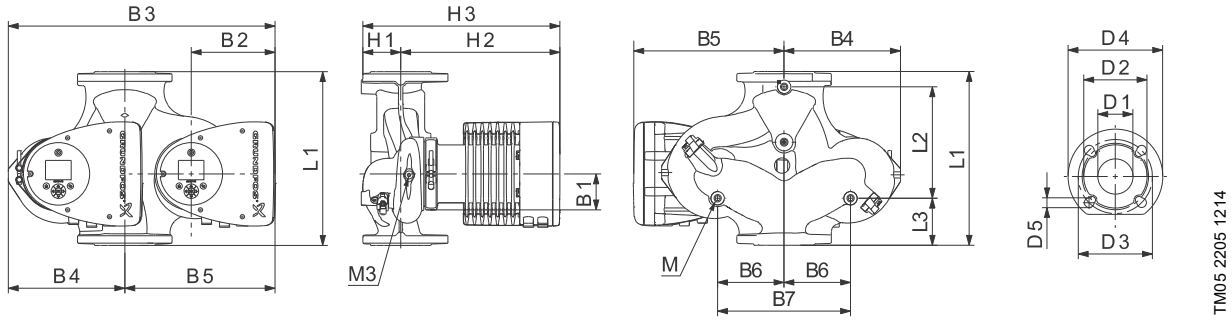


| Pump type | Dimensions [mm] | | | | | | | | | | | | | | | | | | | | |
|---|---|---|---|---|---|---|---|---|---|---|---|---|---|---|---|---|---|---|---|---|---|
| | L1 | L2 | L3 | L4 | L5 | B1 | B3 | B4 | B5 | B6 | B7 | H1 | H2 | H3 | D1 | D2 | D3 | D4 | D5 | M | M3 |
| MAGNA3 D 50-100 F | 280 | 175 | 75 | 75 | 204 | 84 | 517 | 223 | 294 | 130 | 260 | 75 | 304 | 379 | 50 | 102 | 110/125 | 165 | 14/19 | M12 | Rp 1/4 |

For product numbers, see page 139.

## MAGNA3 50-120 F (N)

**1 x 230 V, 50/60 Hz**

Proportional pressure

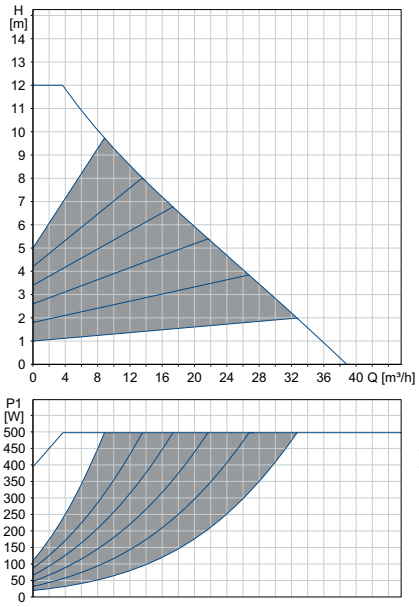


Constant pressure

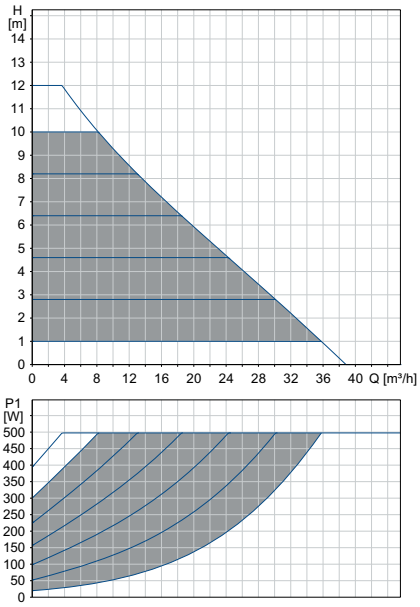


0-10 volt*

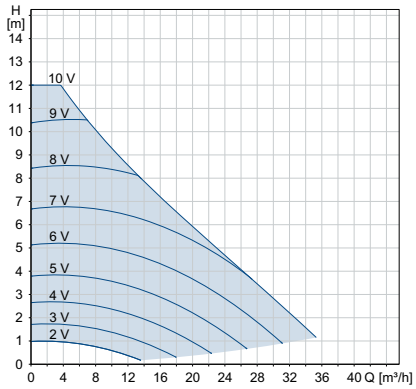


| Speed | P1 [W] | $I_1$ [A] |
|---|---|---|
| **Min.** | 20 | 0.22 |
| **Max.** | 513 | 2.30 |

The pump incorporates overload protection.

| Net weights [kg] | Gross weights [kg] | Ship. vol. [m³] |
|---|---|---|
| 17.6 | 21.1 | 0.05 |

* External setpoint influence shown with a set point of $H_{max}$

Connections: See *Pipe connections*, page 134.

System pressure: Max. 1.0 MPa (10 bar). Also available as max. 1.6 MPa (16 bar).

Liquid temperature: -10 to +110 °C (TF 110).

Also available with: Stainless-steel pump housing, type N.

Specific EEI: 0.17.

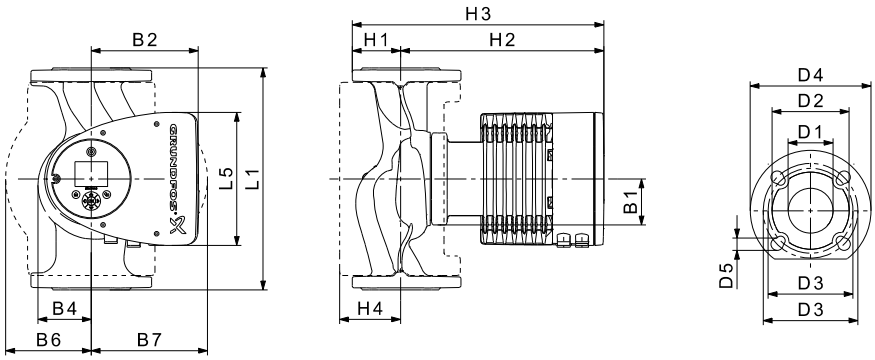


TM05 2204 3612

| Pump type | Dimensions [mm] | | | | | | | | | | | | | | | |
|---|---|---|---|---|---|---|---|---|---|---|---|---|---|---|---|---|
| | L1 | L5 | B1 | B2 | B4 | B6 | B7 | H1 | H2 | H3 | H4 | D1 | D2 | D3 | D4 | D5 |
| MAGNA3 50-120 F (N) | 280 | 204 | 84 | 164 | 73 | 127 | 127 | 72 | 304 | 376 | 97 | 50 | 102 | 110/125 | 165 | 14/19 |

For product numbers, see page 139.

## MAGNA3 D 50-120 F

**1 x 230 V, 50/60 Hz**

Proportional pressure

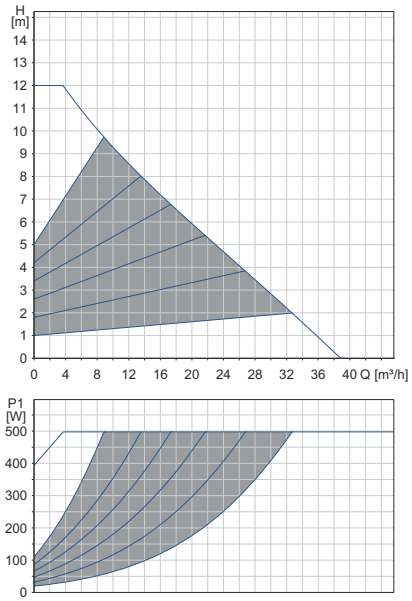


Constant pressure

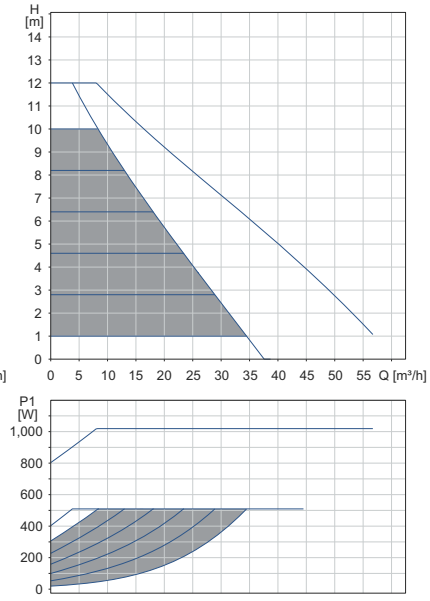


0-10 volt*

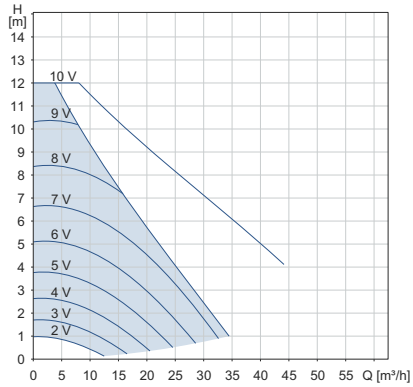


| Speed | P1 [W] | $I_1$ [A] |
|---|---|---|
| **Min.** | 19 | 0.20 |
| **Max.** | 525 | 2.32 |

The pump incorporates overload protection.

| Net weights [kg] | Gross weights [kg] | Ship. vol. [m³] |
|---|---|---|
| 33.3 | 42.1 | 0.05 |

* External setpoint influence shown with a set point of $H_{max}$

Connections: See *Pipe connections*, page 134.

System pressure: Max. 1.0 MPa (10 bar).
Also available as max. 1.6 MPa (16 bar).

Liquid temperature: -10 to +110 °C (TF 110).

Specific EEI: 0.18.

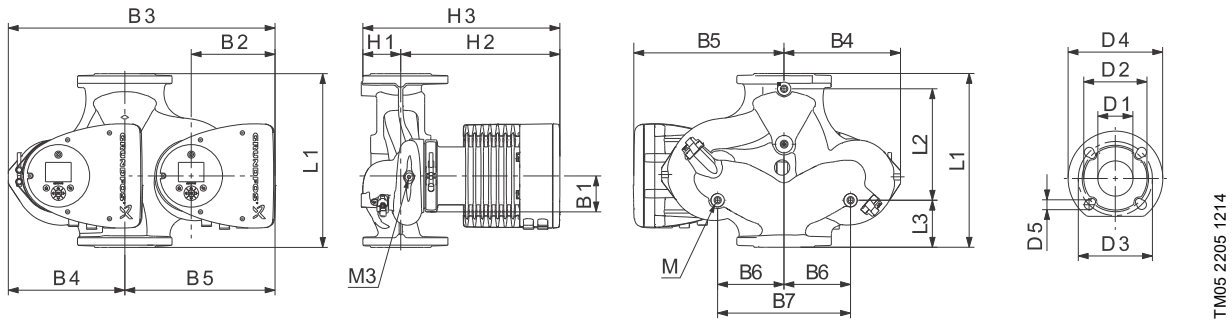


| Pump type | Dimensions [mm] | | | | | | | | | | | | | | | | | | | | |
|---|---|---|---|---|---|---|---|---|---|---|---|---|---|---|---|---|---|---|---|---|---|
| | L1 | L2 | L3 | L4 | L5 | B1 | B3 | B4 | B5 | B6 | B7 | H1 | H2 | H3 | D1 | D2 | D3 | D4 | D5 | M | M3 |
| MAGNA3 D 50-120 F | 280 | 175 | 75 | 75 | 204 | 84 | 517 | 223 | 294 | 130 | 260 | 75 | 304 | 379 | 50 | 102 | 110/125 | 165 | 14/19 | M12 | Rp 1/4 |

For product numbers, see page 139.

## MAGNA3 50-150 F (N)

**1 x 230 V, 50/60 Hz**

Proportional pressure | Constant pressure | 0-10 volt*

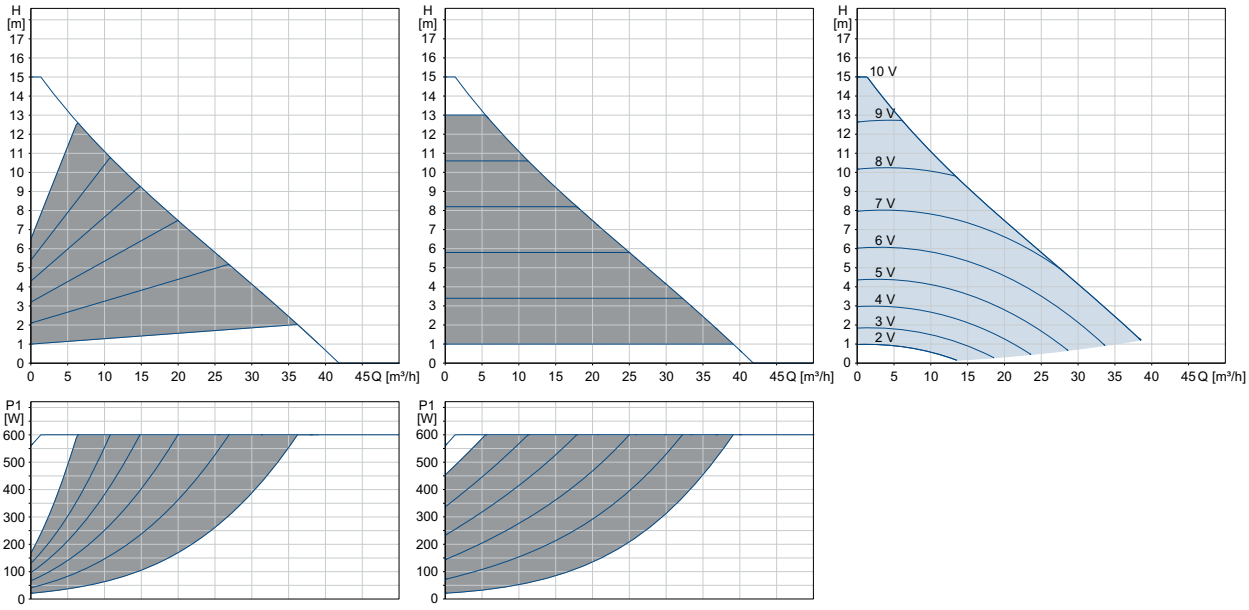


| Speed | P1 [W] | $I_1$ [A] |
|---|---|---|
| **Min.** | 22 | 0.23 |
| **Max.** | 618 | 2.75 |

The pump incorporates overload protection.

| Net weights [kg] | Gross weights [kg] | Ship. vol. [m³] |
|---|---|---|
| 18.3 | 22.0 | 0.05 |

* External setpoint influence shown with a set point of $H_{max}$

Connections: See *Pipe connections*, page 134.

System pressure: Max. 1.0 MPa (10 bar).
Also available as max. 1.6 MPa (16 bar).

Liquid temperature: -10 to +110 °C (TF 110).

Also available with: Stainless-steel pump housing, type N.

Specific EEI: 0.18.

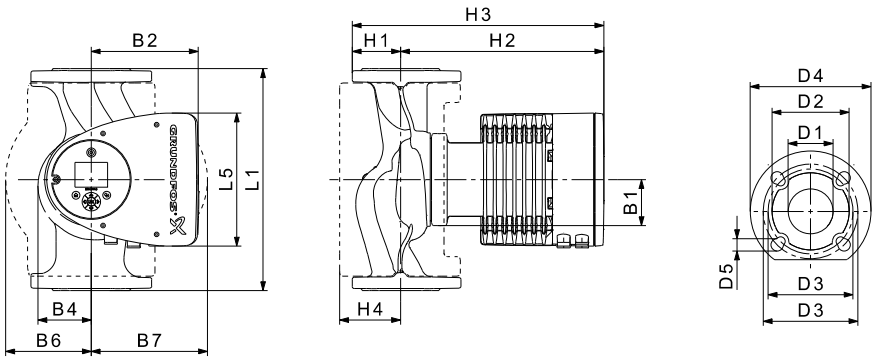


TM05 2204 3612

| Pump type | Dimensions [mm] | | | | | | | | | | | | | | | |
|---|---|---|---|---|---|---|---|---|---|---|---|---|---|---|---|---|
| | L1 | L5 | B1 | B2 | B4 | B6 | B7 | H1 | H2 | H3 | H4 | D1 | D2 | D3 | D4 | D5 |
| MAGNA3 50-150 F (N) | 280 | 204 | 84 | 164 | 73 | 127 | 127 | 72 | 304 | 376 | 97 | 50 | 102 | 110/125 | 165 | 14/19 |

For product numbers, see page 139.

## MAGNA3 D 50-150 F

**1 x 230 V, 50/60 Hz**

Proportional pressure

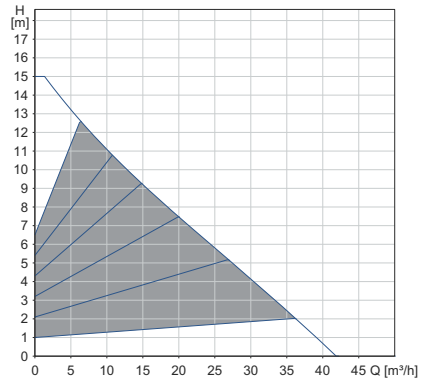


Constant pressure

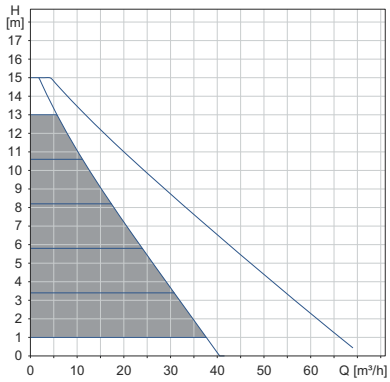


0-10 volt*

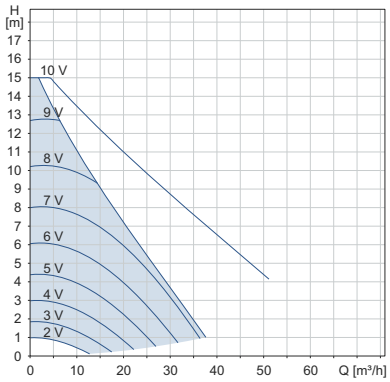


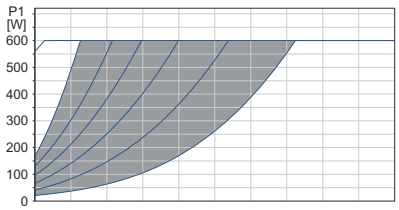


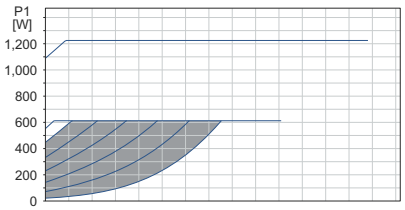


| Speed | P1 [W] | $I_1$ [A] |
|---|---|---|
| **Min.** | 22 | 0.23 |
| **Max.** | 630 | 2.76 |

The pump incorporates overload protection.

| Net weights [kg] | Gross weights [kg] | Ship. vol. [m³] |
|---|---|---|
| 34.7 | 43.9 | 0.05 |

* External setpoint influence shown with a set point of $H_{max}$

Connections: See *Pipe connections*, page 134.

System pressure: Max. 1.0 MPa (10 bar).
Also available as max. 1.6 MPa (16 bar).

Liquid temperature: -10 to +110 °C (TF 110).

Specific EEI: 0.18.

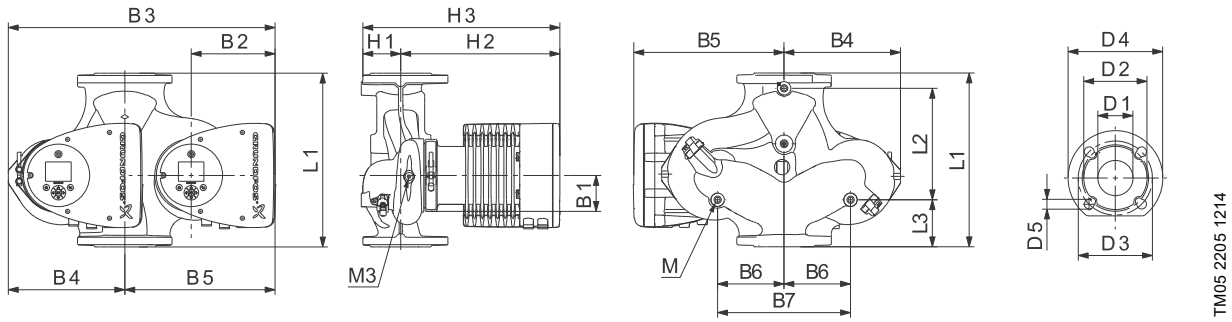


| Pump type | Dimensions [mm] | | | | | | | | | | | | | | | | | | | | |
|---|---|---|---|---|---|---|---|---|---|---|---|---|---|---|---|---|---|---|---|---|---|
| | L1 | L2 | L3 | L4 | L5 | B1 | B3 | B4 | B5 | B6 | B7 | H1 | H2 | H3 | D1 | D2 | D3 | D4 | D5 | M | M3 |
| MAGNA3 D 50-150 F | 280 | 175 | 75 | 75 | 204 | 84 | 517 | 223 | 294 | 130 | 260 | 75 | 304 | 379 | 50 | 102 | 110/125 | 165 | 14/19 | M12 | Rp 1/4 |

For product numbers, see page 139.

## MAGNA3 50-180 F (N)

**1 x 230 V, 50/60 Hz**

Proportional pressure

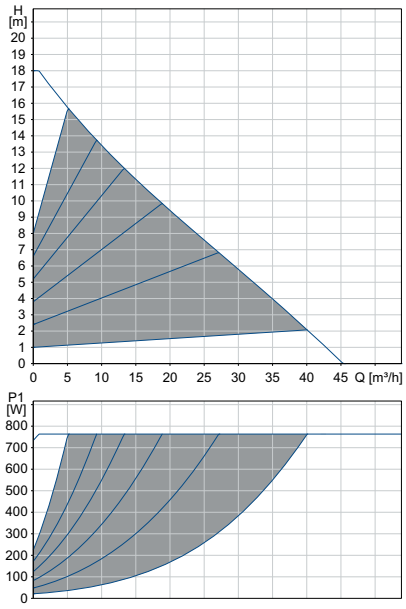


Constant pressure

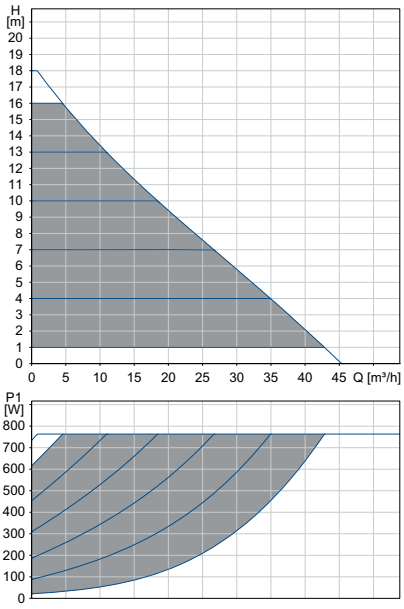


0-10 volt*

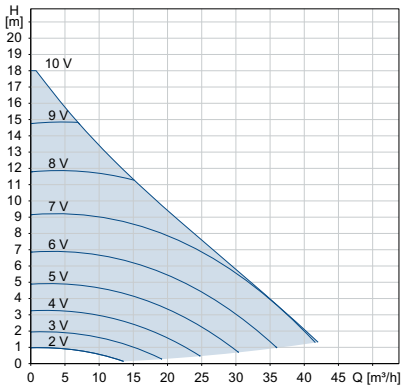


| Speed | P1 [W] | $I_1$ [A] |
|---|---|---|
| **Min.** | 23 | 0.24 |
| **Max.** | 785 | 3.45 |

The pump incorporates overload protection.

| Net weights [kg] | Gross weights [kg] | Ship. vol. [m³] |
|---|---|---|
| 18.3 | 21.9 | 0.05 |

* External setpoint influence shown with a set point of $H_{max}$

Connections: See *Pipe connections*, page 134.

System pressure: Max. 1.0 MPa (10 bar).
Also available as max. 1.6 MPa (16 bar).

Liquid temperature: -10 to +110 °C (TF 110).

Also available with: Stainless-steel pump housing, type N.

Specific EEI: 0.18.

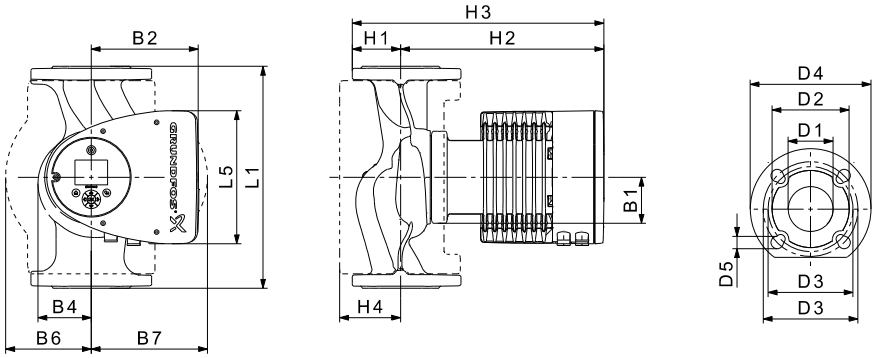


TM05 2204 3612

| Pump type | Dimensions [mm] | | | | | | | | | | | | | | | |
|---|---|---|---|---|---|---|---|---|---|---|---|---|---|---|---|---|
| | L1 | L5 | B1 | B2 | B4 | B6 | B7 | H1 | H2 | H3 | H4 | D1 | D2 | D3 | D4 | D5 |
| MAGNA3 50-180 F (N) | 280 | 204 | 84 | 164 | 73 | 127 | 127 | 72 | 304 | 376 | 97 | 50 | 102 | 110/125 | 165 | 14/19 |

For product numbers, see page 139.

## MAGNA3 D 50-180 F

**1 x 230 V, 50/60 Hz**

Proportional pressure

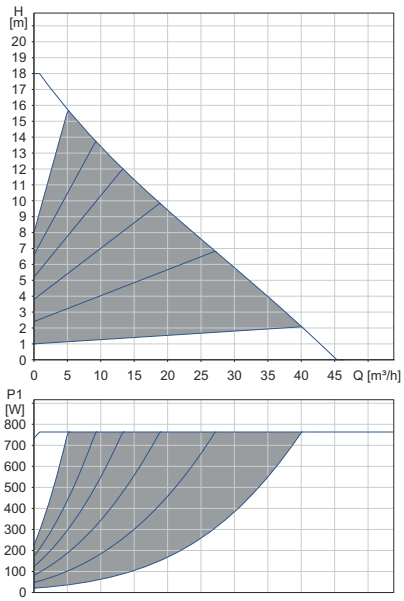


Constant pressure

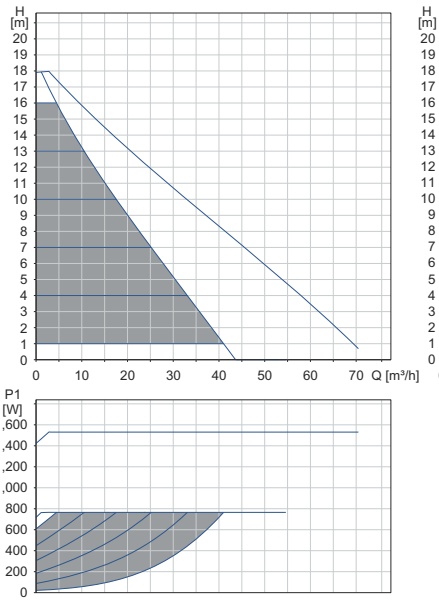


0-10 volt*

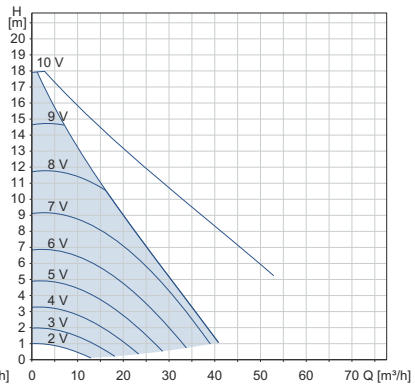


| Speed | P1 [W] | $I_1$ [A] |
|---|---|---|
| **Min.** | 23 | 0.24 |
| **Max.** | 786 | 3.42 |

The pump incorporates overload protection.

| Net weights [kg] | Gross weights [kg] | Ship. vol. [m³] |
|---|---|---|
| **34.7** | **43.9** | **0.05** |

* External setpoint influence shown with a set point of $H_{max}$

Connections: See *Pipe connections*, page 134.

System pressure: Max. 1.0 MPa (10 bar). Also available as max. 1.6 MPa (16 bar).

Liquid temperature: -10 to +110 °C (TF 110).

Specific EEI: 0.18.

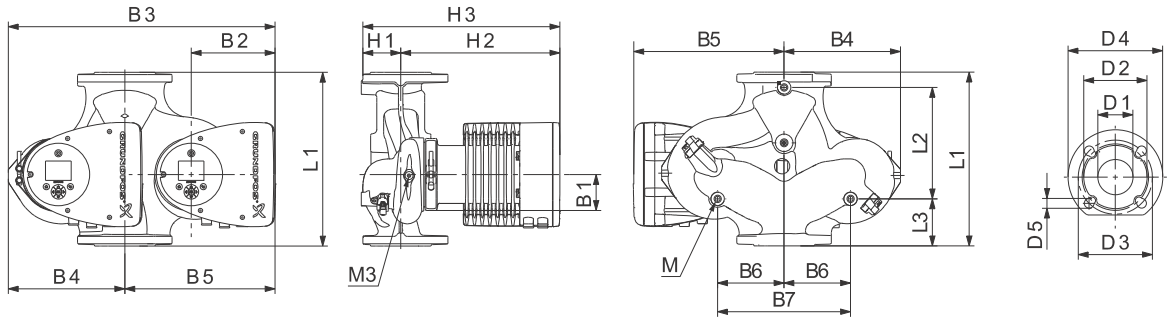


| Pump type | Dimensions [mm] | | | | | | | | | | | | | | | | | | | | |
|---|---|---|---|---|---|---|---|---|---|---|---|---|---|---|---|---|---|---|---|---|---|
| | L1 | L2 | L3 | L4 | L5 | B1 | B3 | B4 | B5 | B6 | B7 | H1 | H2 | H3 | D1 | D2 | D3 | D4 | D5 | M | M3 |
| MAGNA3 D 50-180 F | 280 | 175 | 75 | 75 | 204 | 84 | 517 | 223 | 294 | 130 | 260 | 75 | 304 | 379 | 50 | 102 | 110/125 | 165 | 14/19 | M12 | Rp 1/4 |

For product numbers, see page 139.

## MAGNA3 65-40 F (N)

**1 x 230 V, 50/60 Hz**

Proportional pressure | Constant pressure | 0-10 volt*

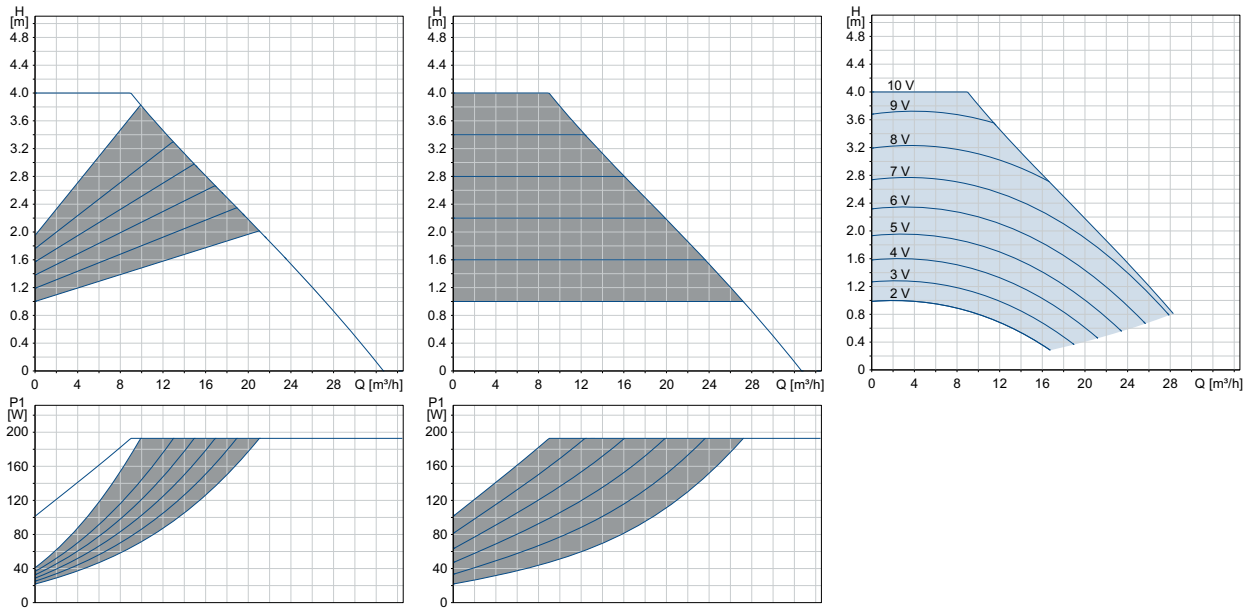


| Speed | P1 [W] | $I_1$ [A] |
|---|---|---|
| **Min.** | 21 | 0.22 |
| **Max.** | 202 | 0.94 |

The pump incorporates overload protection.

| Net weights [kg] | Gross weights [kg] | Ship. vol. [m³] |
|---|---|---|
| 20.2 | 23.8 | 0.06 |

* External setpoint influence shown with a set point of $H_{max}$

Connections: See *Pipe connections*, page 134.

System pressure: Max. 1.0 MPa (10 bar).
Also available as max. 1.6 MPa (16 bar).

Liquid temperature: -10 to +110 °C (TF 110).

Also available with: Stainless-steel pump housing, type N.

Specific EEI: 0.18.

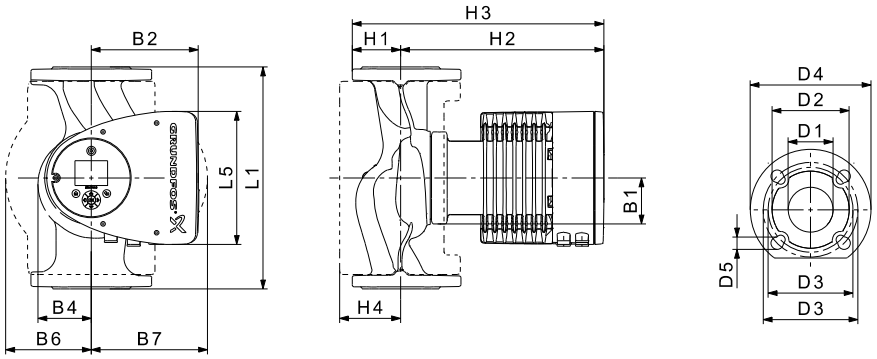


TM05 2204 3612

| Pump type | Dimensions [mm] | | | | | | | | | | | | | | | |
|---|---|---|---|---|---|---|---|---|---|---|---|---|---|---|---|---|
| | L1 | L5 | B1 | B2 | B4 | B6 | B7 | H1 | H2 | H3 | H4 | D1 | D2 | D3 | D4 | D5 |
| MAGNA3 65-40 F (N) | 340 | 204 | 84 | 164 | 73 | 133 | 133 | 74 | 312 | 386 | 94 | 65 | 119 | 130/145 | 185 | 14/19 |

For product numbers, see page 139.

## MAGNA3 D 65-40 F

**1 x 230 V, 50/60 Hz**

Proportional pressure

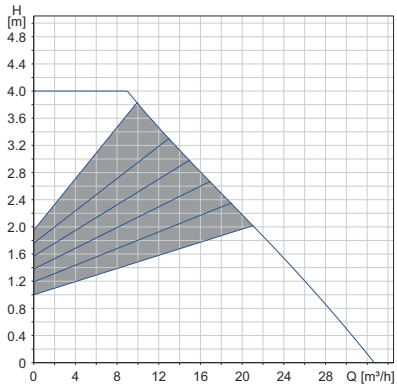


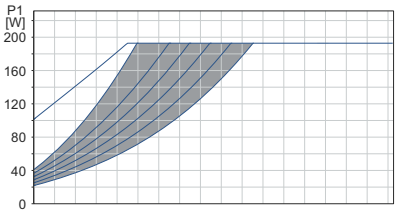


Constant pressure

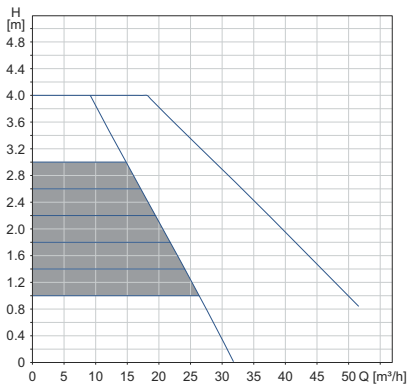


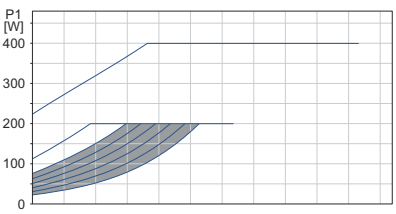


0-10 volt*

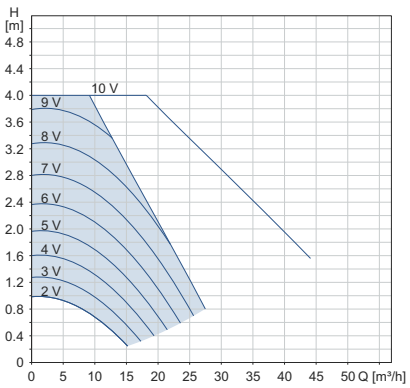


| Speed | P1 [W] | $I_1$ [A] |
|---|---|---|
| **Min.** | 20 | 0.22 |
| **Max.** | 209 | 0.95 |

The pump incorporates overload protection.

| Net weights [kg] | Gross weights [kg] | Ship. vol. [m³] |
|---|---|---|
| 36.9 | 45.8 | 0.06 |

* External setpoint influence shown with a set point of $H_{max}$

Connections: See *Pipe connections*, page 134.

System pressure: Max. 1.0 MPa (10 bar).
Also available as max. 1.6 MPa (16 bar).

Liquid temperature: -10 to +110 °C (TF 110).

Specific EEI: 0.20.

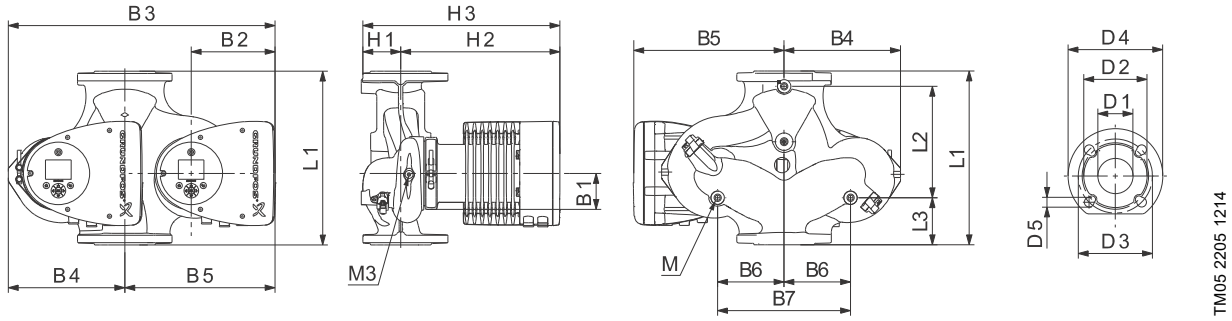


| Pump type | Dimensions [mm] | | | | | | | | | | | | | | | | | | | | |
|---|---|---|---|---|---|---|---|---|---|---|---|---|---|---|---|---|---|---|---|---|---|
| | L1 | L2 | L3 | L4 | L5 | B1 | B3 | B4 | B5 | B6 | B7 | H1 | H2 | H3 | D1 | D2 | D3 | D4 | D5 | M | M3 |
| MAGNA3 D 65-40 F | 340 | 218 | 92 | 92 | 204 | 84 | 522 | 228 | 294 | 130 | 260 | 77 | 312 | 389 | 65 | 119 | 130/145 | 185 | 14/19 | M12 | Rp 1/4 |

For product numbers, see page 139.

## MAGNA3 65-60 F (N)

**1 x 230 V, 50/60 Hz**

Proportional pressure | Constant pressure | 0-10 volt*

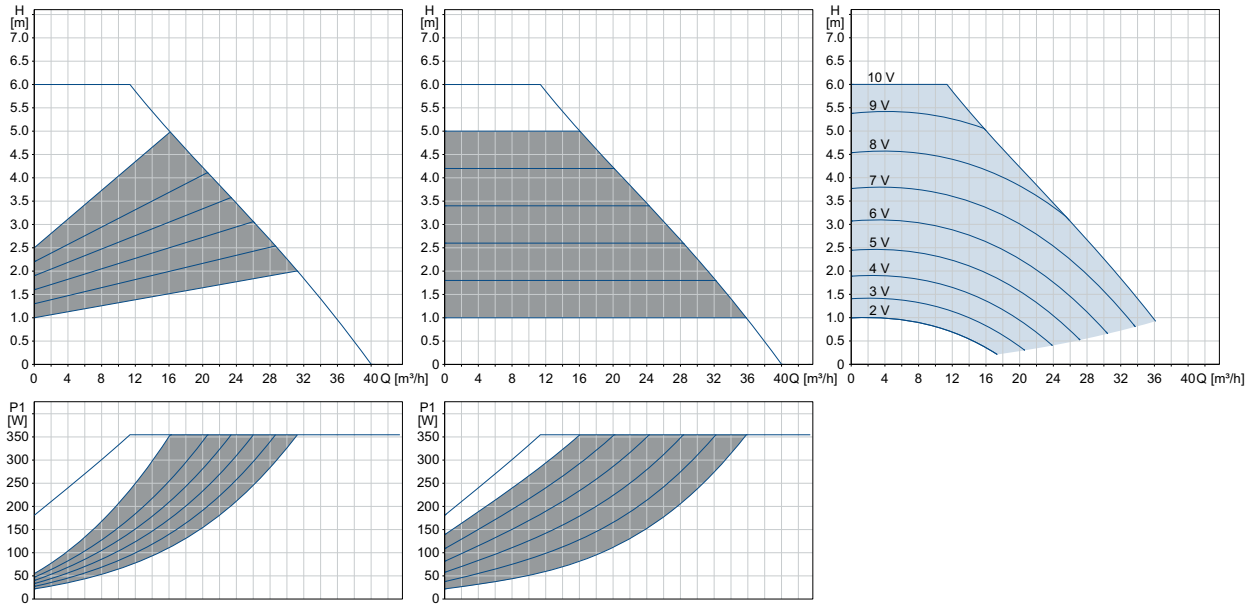


| Speed | P1 [W] | $I_1$ [A] |
|---|---|---|
| **Min.** | 20 | 0.22 |
| **Max.** | 367 | 1.64 |

The pump incorporates overload protection.

| Net weights [kg] | Gross weights [kg] | Ship. vol. [m³] |
|---|---|---|
| 20.2 | 23.8 | 0.06 |

* External setpoint influence shown with a set point of $H_{max}$

Connections: See *Pipe connections*, page 134.

System pressure: Max. 1.0 MPa (10 bar).
Also available as max. 1.6 MPa (16 bar).

Liquid temperature: -10 to +110 °C (TF 110).

Also available with: Stainless-steel pump housing, type N.

Specific EEI: 0.17.

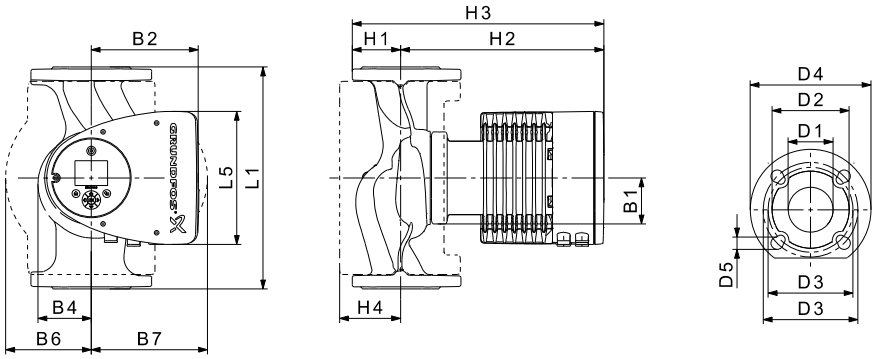


| Pump type | Dimensions [mm] | | | | | | | | | | | | | | | |
|---|---|---|---|---|---|---|---|---|---|---|---|---|---|---|---|---|
| | L1 | L5 | B1 | B2 | B4 | B6 | B7 | H1 | H2 | H3 | H4 | D1 | D2 | D3 | D4 | D5 |
| MAGNA3 65-60 F (N) | 340 | 204 | 84 | 164 | 73 | 133 | 133 | 74 | 312 | 386 | 94 | 65 | 119 | 130/145 | 185 | 14/19 |

For product numbers, see page 139.

## MAGNA3 D 65-60 F

## 1 x 230 V, 50/60 Hz

0-10 volt*

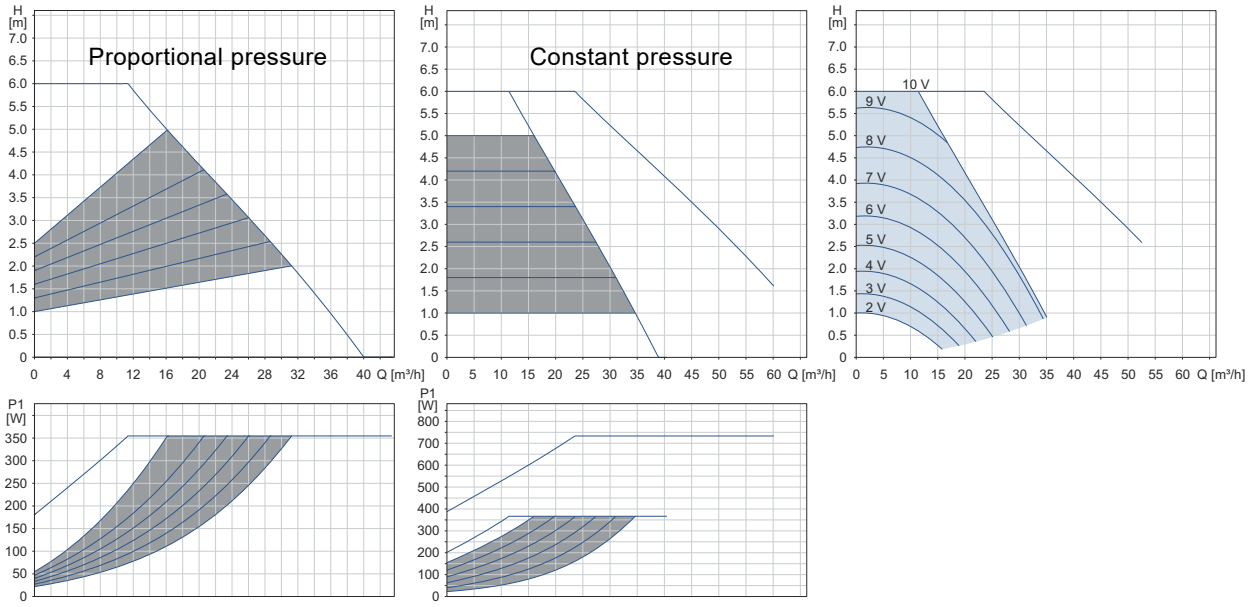


| Speed | P1 [W] | $I_1$ [A] |
|---|---|---|
| **Min.** | 21 | 0.23 |
| **Max.** | 379 | 1.67 |

The pump incorporates overload protection.

| Net weights [kg] | Gross weights [kg] | Ship. vol. [$m^3$] |
|---|---|---|
| 36.9 | 45.8 | 0.06 |

* External setpoint influence shown with a set point of $H_{max}$

Connections: See *Pipe connections*, page 134.

System pressure: Max. 1.0 MPa (10 bar).
Also available as max. 1.6 MPa (16 bar).

Liquid temperature: -10 to +110 °C (TF 110).

Specific EEI: 0.19.

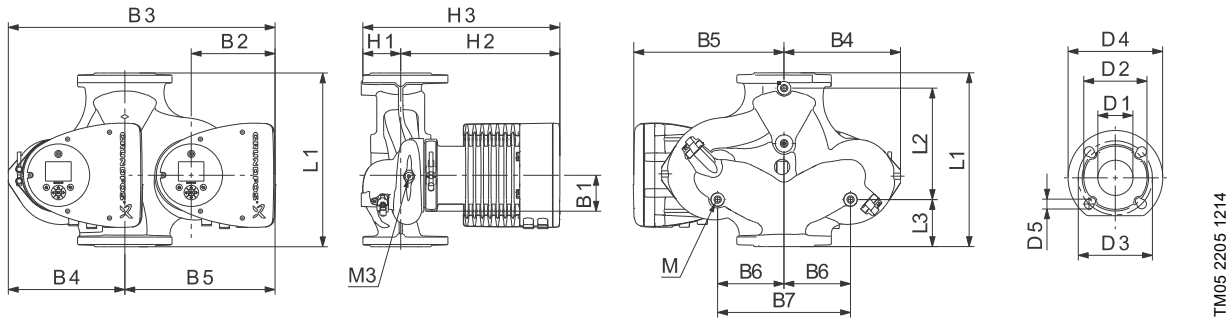


| Pump type | Dimensions [mm] | | | | | | | | | | | | | | | | | | | | |
|---|---|---|---|---|---|---|---|---|---|---|---|---|---|---|---|---|---|---|---|---|---|
| | L1 | L2 | L3 | L4 | L5 | B1 | B3 | B4 | B5 | B6 | B7 | H1 | H2 | H3 | D1 | D2 | D3 | D4 | D5 | M | M3 |
| MAGNA3 D 65-60 F | 340 | 218 | 92 | 92 | 204 | 84 | 522 | 228 | 294 | 130 | 260 | 77 | 312 | 389 | 65 | 119 | 130/145 | 185 | 14/19 | M12 | Rp 1/4 |

For product numbers, see page 139.

## MAGNA3 65-80 F (N)

**1 x 230 V, 50/60 Hz**

Proportional pressure

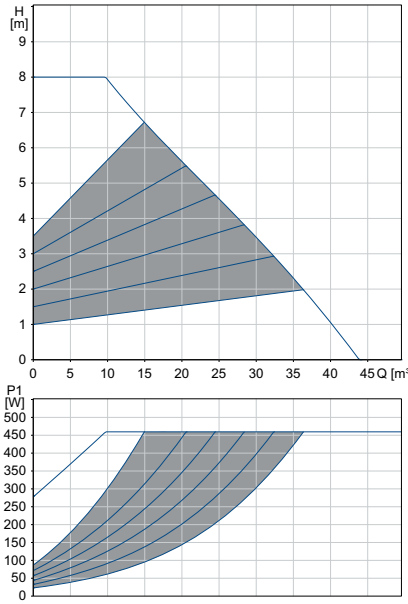


Constant pressure

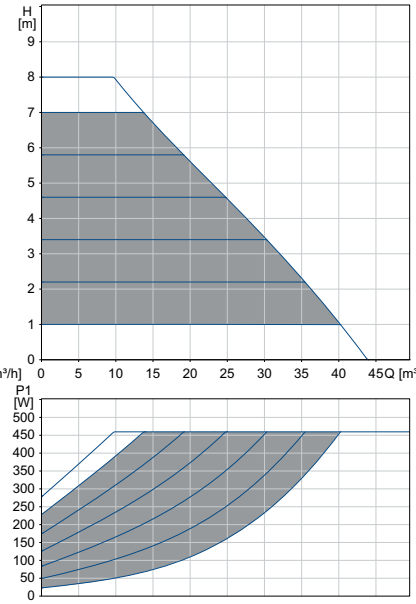


0-10 volt*

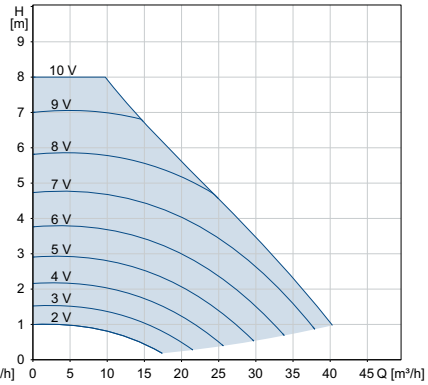


| Speed | P1 [W] | $I_1$ [A] |
|---|---|---|
| **Min.** | 22 | 0.24 |
| **Max.** | 474 | 2.11 |

The pump incorporates overload protection.

| Net weights [kg] | Gross weights [kg] | Ship. vol. [m³] |
|---|---|---|
| 21.0 | 24.7 | 0.06 |

* External setpoint influence shown with a set point of $H_{max}$

Connections: See *Pipe connections*, page 134.

System pressure: Max. 1.0 MPa (10 bar).
Also available as max. 1.6 MPa (16 bar).

Liquid temperature: -10 to +110 °C (TF 110).

Also available with: Stainless-steel pump housing, type N.

Specific EEI: 0.18.

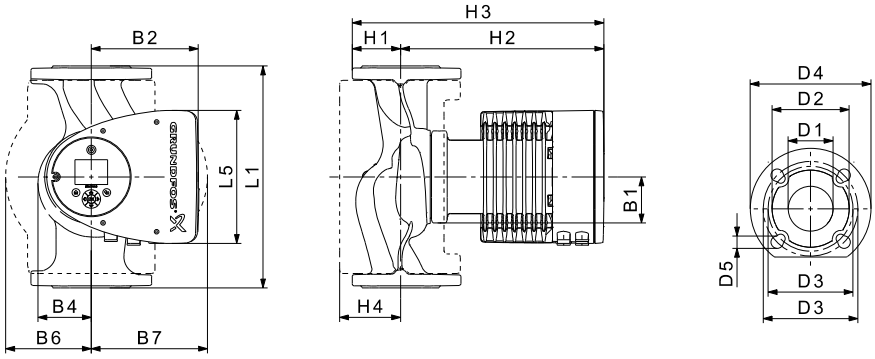


TM05 2204 3612

| Pump type | Dimensions [mm] | | | | | | | | | | | | | | | |
|---|---|---|---|---|---|---|---|---|---|---|---|---|---|---|---|---|
| | L1 | L5 | B1 | B2 | B4 | B6 | B7 | H1 | H2 | H3 | H4 | D1 | D2 | D3 | D4 | D5 |
| MAGNA3 65-80 F (N) | 340 | 204 | 84 | 164 | 73 | 133 | 133 | 74 | 312 | 386 | 94 | 65 | 119 | 130/145 | 185 | 14/19 |

For product numbers, see page 139.

## MAGNA3 D 65-80 F

**1 x 230 V, 50/60 Hz**

Proportional pressure

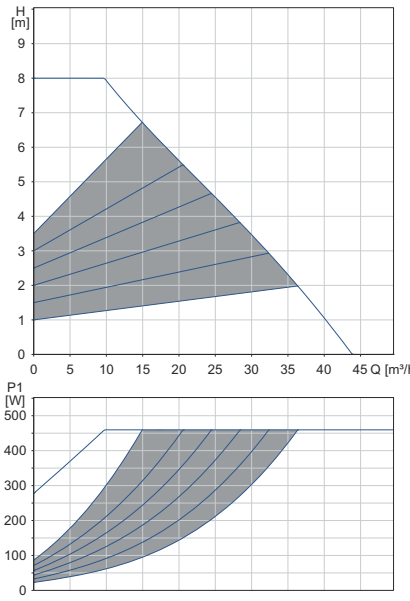


Constant pressure

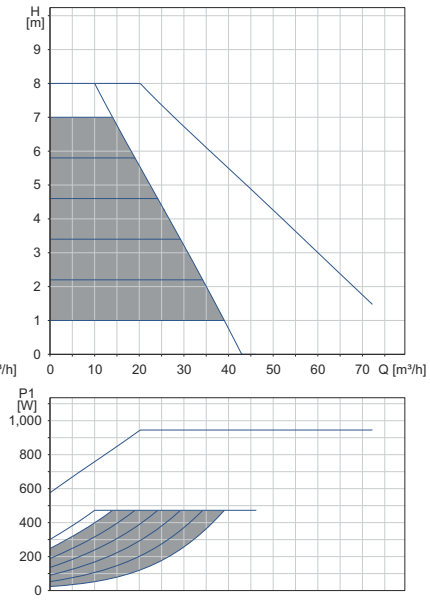


0-10 volt*

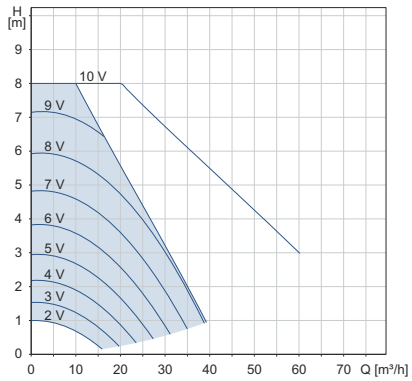


| Speed | P1 [W] | $I_1$ [A] |
|---|---|---|
| **Min.** | 22 | 0.24 |
| **Max.** | 487 | 2.15 |

The pump incorporates overload protection.

| Net weights [kg] | Gross weights [kg] | Ship. vol. [m³] |
|---|---|---|
| 38.7 | 47.6 | 0.06 |

* External setpoint influence shown with a set point of $H_{max}$

Connections: See *Pipe connections*, page 134.

System pressure: Max. 1.0 MPa (10 bar).
Also available as max. 1.6 MPa (16 bar).

Liquid temperature: -10 to +110 °C (TF 110).

Specific EEI: 0.20.

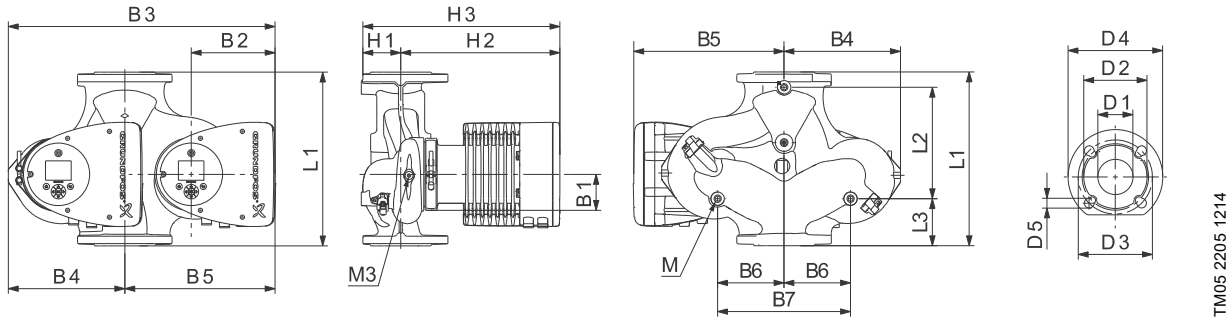


| Pump type | Dimensions [mm] | | | | | | | | | | | | | | | | | | | | |
|---|---|---|---|---|---|---|---|---|---|---|---|---|---|---|---|---|---|---|---|---|---|
| | L1 | L2 | L3 | L4 | L5 | B1 | B3 | B4 | B5 | B6 | B7 | H1 | H2 | H3 | D1 | D2 | D3 | D4 | D5 | M | M3 |
| MAGNA3 D 65-80 F | 340 | 218 | 92 | 92 | 204 | 84 | 522 | 228 | 294 | 130 | 260 | 77 | 312 | 389 | 65 | 119 | 130/145 | 185 | 14/19 | M12 | Rp 1/4 |

For product numbers, see page 139.

## MAGNA3 65-100 F (N)

**1 x 230 V, 50/60 Hz**

Proportional pressure | Constant pressure | 0-10 volt*

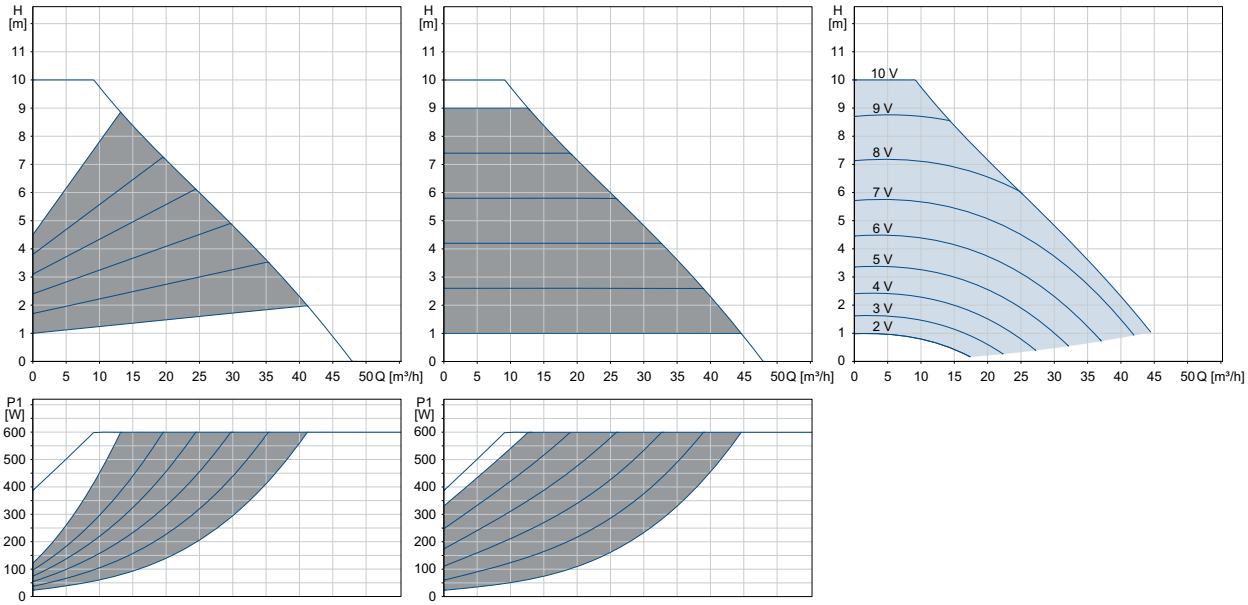


| Speed | P1 [W] | $I_1$ [A] |
|---|---|---|
| **Min.** | 21 | 0.23 |
| **Max.** | 617 | 2.74 |

The pump incorporates overload protection.

| Net weights [kg] | Gross weights [kg] | Ship. vol. [m³] |
|---|---|---|
| 21.0 | 24.7 | 0.06 |

* External setpoint influence shown with a set point of $H_{max}$

| | |
|---|---|
| Connections: | See *Pipe connections*, page 134. |
| System pressure: | Max. 1.0 MPa (10 bar).<br>Also available as max. 1.6 MPa (16 bar). |
| Liquid temperature: | -10 to +110 °C (TF 110). |
| Also available with: | Stainless-steel pump housing, type N. |
| Specific EEI: | 0.17. |

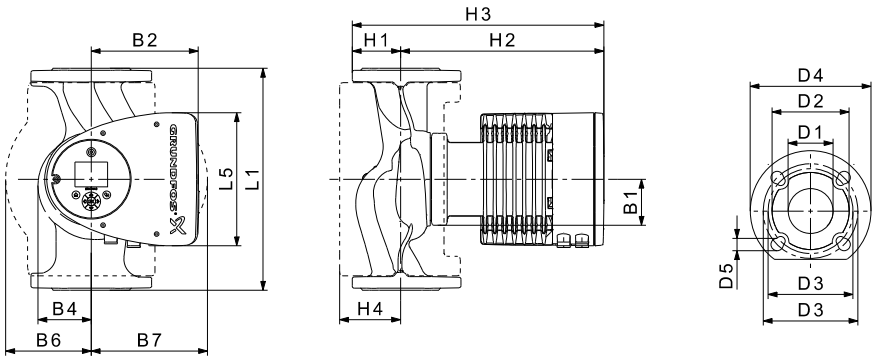


TM05 2204 3612

| Pump type | Dimensions [mm] | | | | | | | | | | | | | | | |
|---|---|---|---|---|---|---|---|---|---|---|---|---|---|---|---|---|
| | L1 | L5 | B1 | B2 | B4 | B6 | B7 | H1 | H2 | H3 | H4 | D1 | D2 | D3 | D4 | D5 |
| MAGNA3 65-100 F (N) | 340 | 204 | 84 | 164 | 73 | 133 | 133 | 74 | 312 | 386 | 94 | 65 | 119 | 130/145 | 185 | 14/19 |

For product numbers, see page 139.

## MAGNA3 D 65-100 F

**1 x 230 V, 50/60 Hz**

Proportional pressure

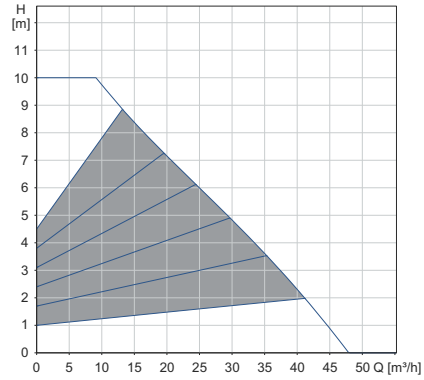


Constant pressure

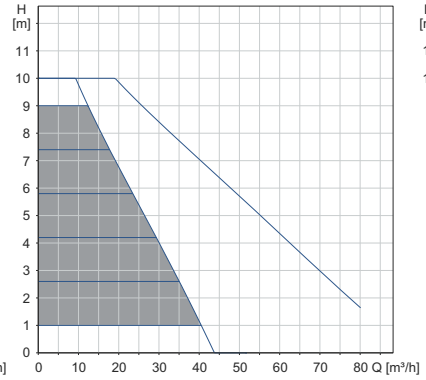


0-10 volt*

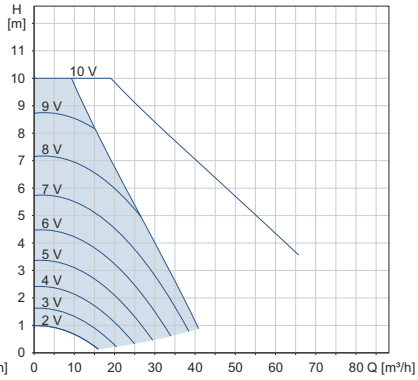


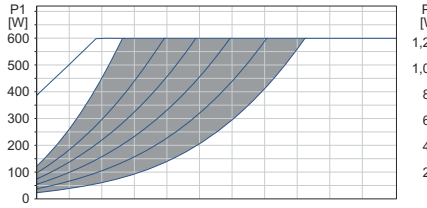


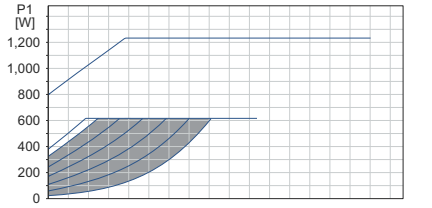


| Speed | P1 [W] | $I_1$ [A] |
|---|---|---|
| **Min.** | 23 | 0.24 |
| **Max.** | 635 | 2.77 |

The pump incorporates overload protection.

| Net weights [kg] | Gross weights [kg] | Ship. vol. [m³] |
|---|---|---|
| 38.7 | 47.6 | 0.06 |

* External setpoint influence shown with a set point of $H_{max}$

Connections: See *Pipe connections*, page 134.

System pressure: Max. 1.0 MPa (10 bar).
Also available as max. 1.6 MPa (16 bar).

Liquid temperature: -10 to +110 °C (TF 110).

Specific EEI: 0.19.

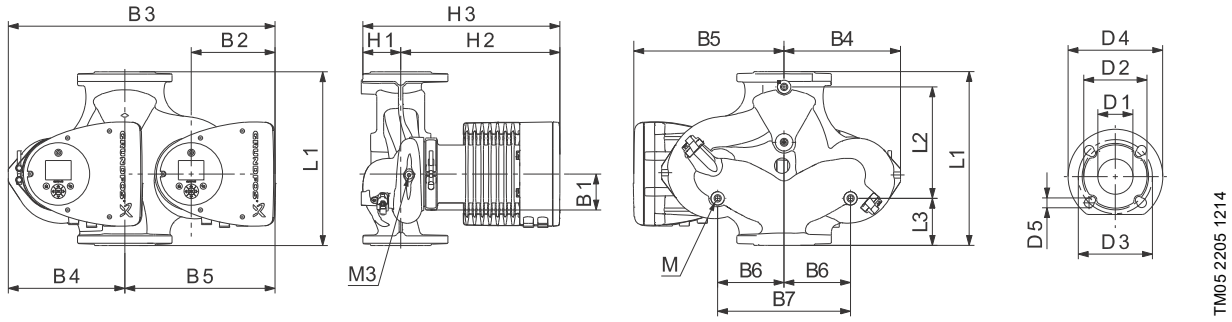


| Pump type | Dimensions [mm] | | | | | | | | | | | | | | | | | | | | |
|---|---|---|---|---|---|---|---|---|---|---|---|---|---|---|---|---|---|---|---|---|---|
| | L1 | L2 | L3 | L4 | L5 | B1 | B3 | B4 | B5 | B6 | B7 | H1 | H2 | H3 | D1 | D2 | D3 | D4 | D5 | M | M3 |
| MAGNA3 D 65-100 F | 340 | 218 | 92 | 92 | 204 | 84 | 522 | 228 | 294 | 130 | 260 | 77 | 312 | 389 | 65 | 119 | 130/145 | 185 | 14/19 | M12 | Rp 1/4 |

For product numbers, see page 139.

## MAGNA3 65-120 F (N)

**1 x 230 V, 50/60 Hz**

Proportional pressure | Constant pressure | 0-10 volt*

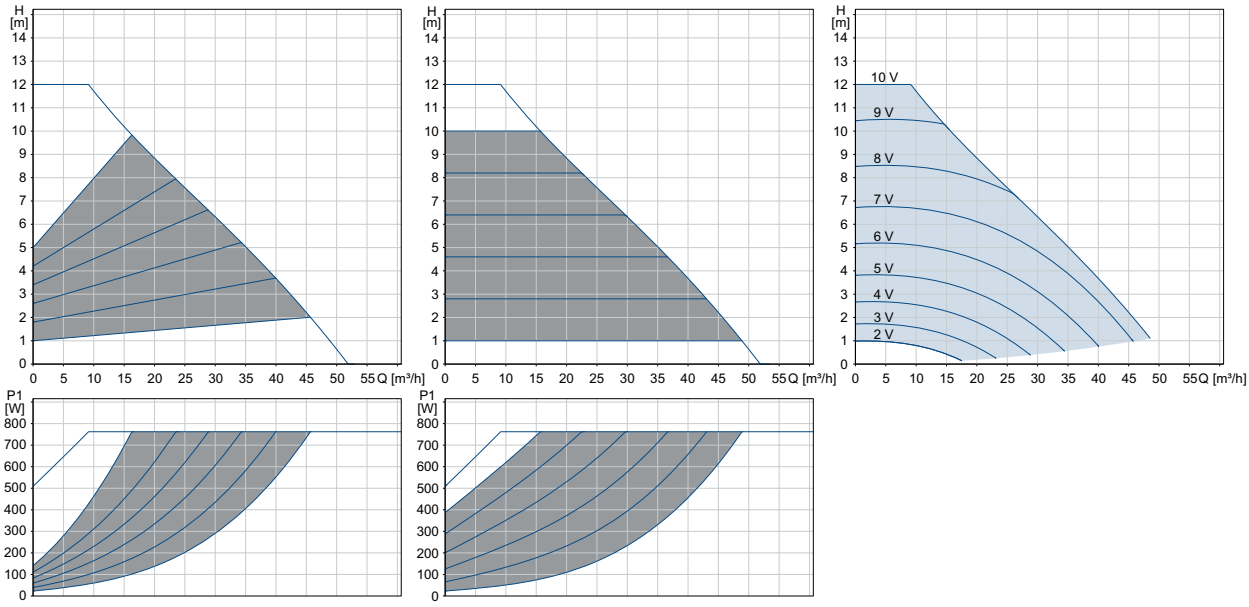


| Speed | P1 [W] | $I_1$ [A] |
|---|---|---|
| **Min.** | 16 | 0.18 |
| **Max.** | 784 | 3.45 |

The pump incorporates overload protection.

| Net weights [kg] | Gross weights [kg] | Ship. vol. [m³] |
|---|---|---|
| 21.0 | 24.7 | 0.06 |

* External setpoint influence shown with a set point of $H_{max}$

Connections: See *Pipe connections*, page 134.

System pressure: Max. 1.0 MPa (10 bar). Also available as max. 1.6 MPa (16 bar).

Liquid temperature: -10 to +110 °C (TF 110).

Also available with: Stainless-steel pump housing, type N.

Specific EEI: 0.17.

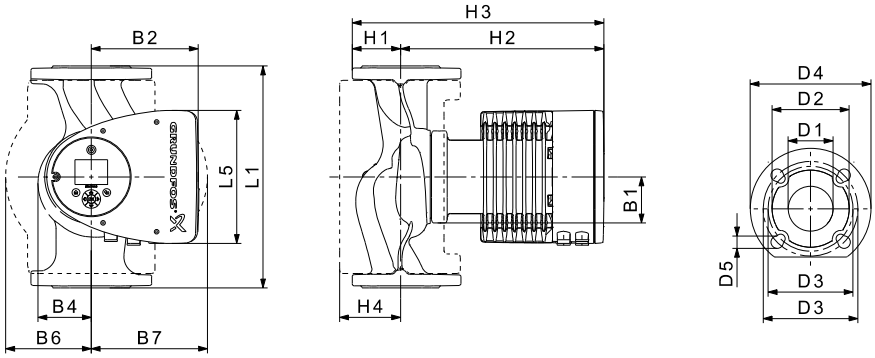


TM05 2204 3612

| Pump type | Dimensions [mm] | | | | | | | | | | | | | | | |
|---|---|---|---|---|---|---|---|---|---|---|---|---|---|---|---|---|
| | L1 | L5 | B1 | B2 | B4 | B6 | B7 | H1 | H2 | H3 | H4 | D1 | D2 | D3 | D4 | D5 |
| MAGNA3 65-120 F (N) | 340 | 204 | 84 | 164 | 73 | 133 | 133 | 74 | 312 | 386 | 94 | 65 | 119 | 130/145 | 185 | 14/19 |

For product numbers, see page 139.

## MAGNA3 D 65-120 F

**1 x 230 V, 50/60 Hz**

Proportional pressure

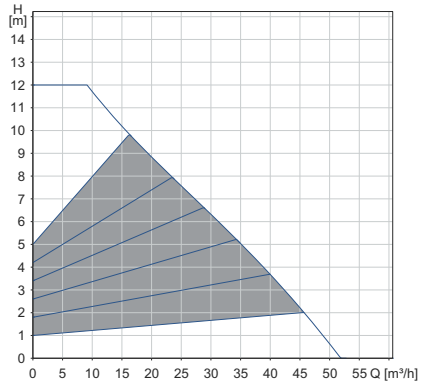


Constant pressure

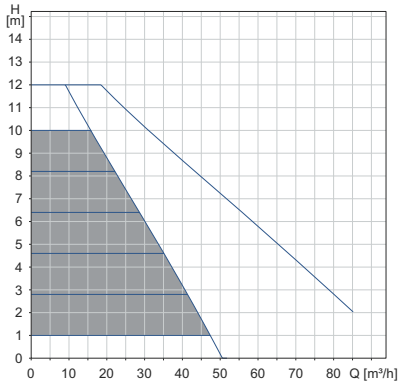


0-10 volt*

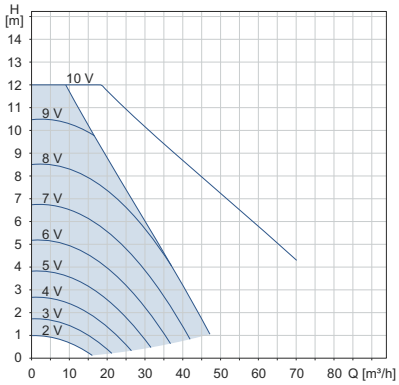


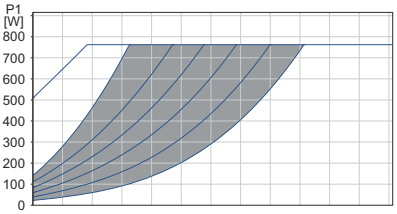


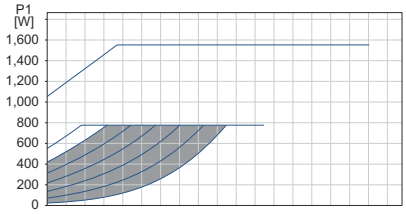


| Speed | P1 [W] | $I_1$ [A] |
|---|---|---|
| **Min.** | 23 | 0.24 |
| **Max.** | 798 | 3.47 |

The pump incorporates overload protection.

| Net weights [kg] | Gross weights [kg] | Ship. vol. [m³] |
|---|---|---|
| 38.7 | 47.6 | 0.06 |

* External setpoint influence shown with a set point of $H_{max}$

Connections: See *Pipe connections*, page 134.

System pressure: Max. 1.0 MPa (10 bar).
Also available as max. 1.6 MPa (16 bar).

Liquid temperature: -10 to +110 °C (TF 110).

Specific EEI: 0.18.

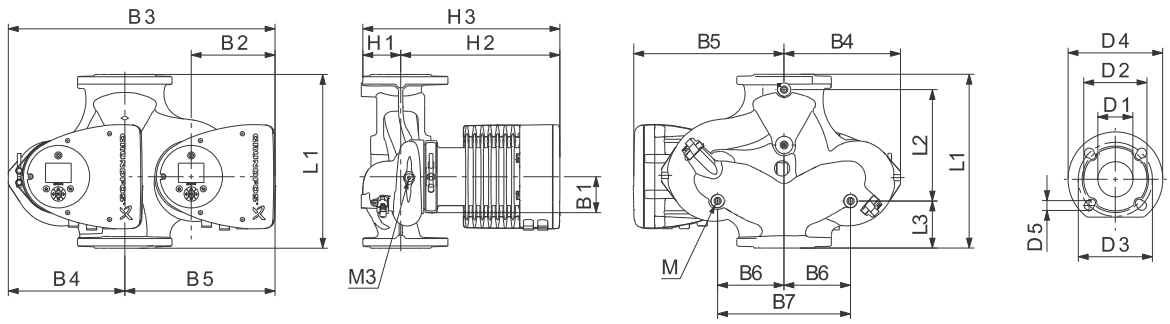


| Pump type | Dimensions [mm] | | | | | | | | | | | | | | | | | | | | |
|---|---|---|---|---|---|---|---|---|---|---|---|---|---|---|---|---|---|---|---|---|---|
| | L1 | L2 | L3 | L4 | L5 | B1 | B3 | B4 | B5 | B6 | B7 | H1 | H2 | H3 | D1 | D2 | D3 | D4 | D5 | M | M3 |
| MAGNA3 D 65-120 F | 340 | 218 | 92 | 92 | 204 | 84 | 522 | 228 | 294 | 130 | 260 | 77 | 312 | 389 | 65 | 119 | 130/145 | 185 | 14/19 | M12 | Rp 1/4 |

For product numbers, see page 139.

## MAGNA3 65-150 F (N)

**1 x 230 V, 50/60 Hz**

Proportional pressure

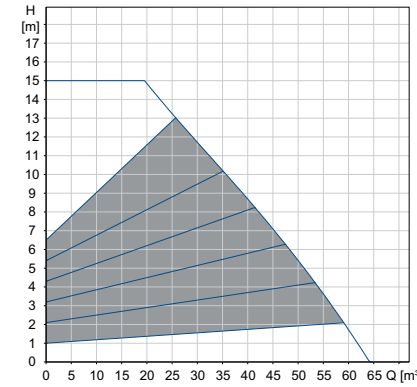


Constant pressure

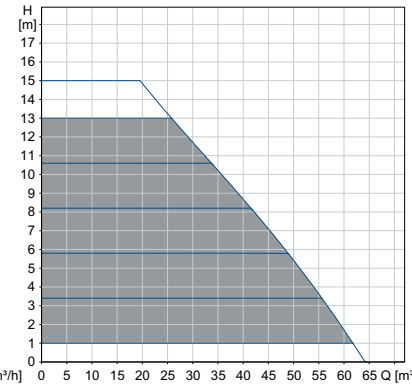


0-10 volt*

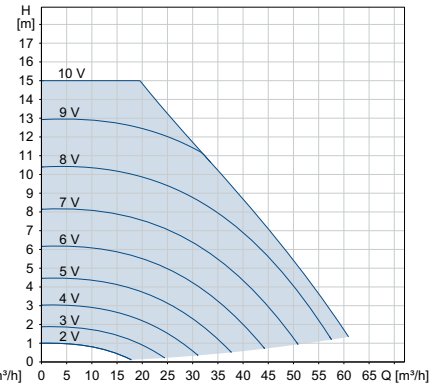


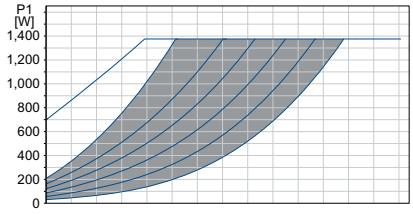


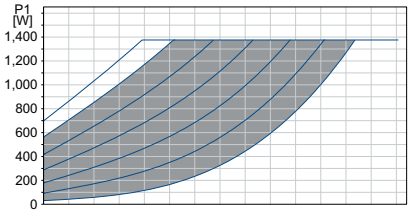


| Speed | P1 [W] | $I_1$ [A] |
|---|---|---|
| **Min.** | 29 | 0.30 |
| **Max.** | 1409 | 6.18 |

The pump incorporates overload protection.

| Net weights [kg] | Gross weights [kg] | Ship. vol. [m³] |
|---|---|---|
| 24.0 | 27.8 | 0.06 |

* External setpoint influence shown with a set point of $H_{max}$

| | |
|---|---|
| Connections: | See *Pipe connections*, page 134. |
| System pressure: | Max. 1.0 MPa (10 bar).<br>Also available as max. 1.6 MPa (16 bar). |
| Liquid temperature: | -10 to +110 °C (TF 110). |
| Also available with: | Stainless-steel pump housing, type N. |
| Specific EEI: | 0.17. |

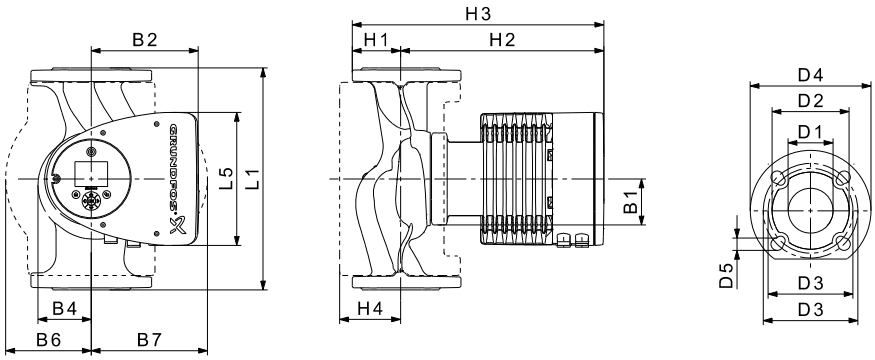


TM05 2204 3612

| Pump type | Dimensions [mm] | | | | | | | | | | | | | | | |
|---|---|---|---|---|---|---|---|---|---|---|---|---|---|---|---|---|
| | L1 | L5 | B1 | B2 | B4 | B6 | B7 | H1 | H2 | H3 | H4 | D1 | D2 | D3 | D4 | D5 |
| MAGNA3 65-150 F (N) | 340 | 204 | 84 | 164 | 73 | 133 | 133 | 74 | 312 | 386 | 94 | 65 | 119 | 130/145 | 185 | 14/19 |

For product numbers, see page 139.

## MAGNA3 D 65-150 F

## 1 x 230 V, 50/60 Hz

Proportional pressure

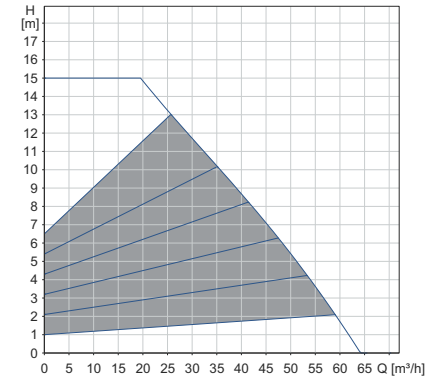


Constant pressure

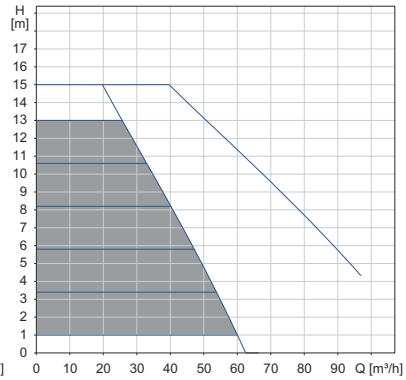


0-10 volt*

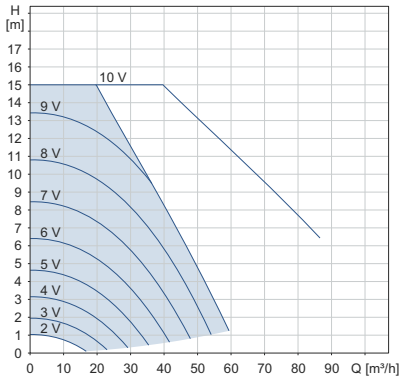


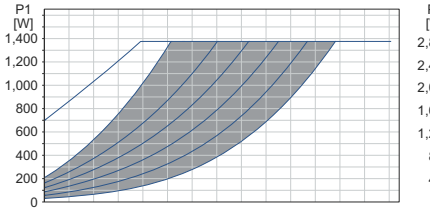


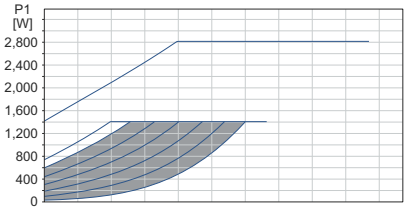


| Speed | P1 [W] | $I_1$ [A] |
|---|---|---|
| **Min.** | 29 | 0.30 |
| **Max.** | 1442 | 6.30 |

The pump incorporates overload protection.

| Net weights [kg] | Gross weights [kg] | Ship. vol. [m³] |
|---|---|---|
| 44.6 | 53.7 | 0.06 |

* External setpoint influence shown with a set point of $H_{max}$

Connections: See *Pipe connections*, page 134.

System pressure: Max. 1.0 MPa (10 bar).
Also available as max. 1.6 MPa (16 bar).

Liquid temperature: -10 to +110 °C (TF 110).

Specific EEI: 0.17.

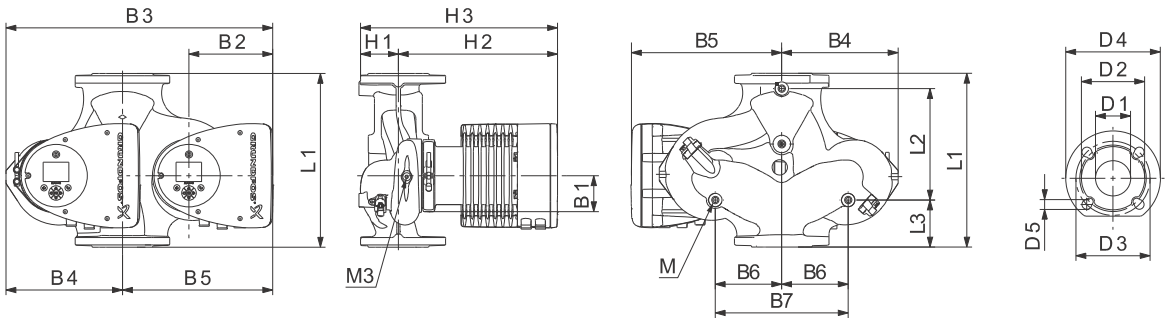


| Pump type | Dimensions [mm] | | | | | | | | | | | | | | | | | | | | |
|---|---|---|---|---|---|---|---|---|---|---|---|---|---|---|---|---|---|---|---|---|---|
| | L1 | L2 | L3 | L4 | L5 | B1 | B3 | B4 | B5 | B6 | B7 | H1 | H2 | H3 | D1 | D2 | D3 | D4 | D5 | M | M3 |
| MAGNA3 D 65-150 F | 340 | 218 | 92 | 92 | 204 | 84 | 522 | 228 | 294 | 130 | 260 | 77 | 312 | 389 | 65 | 119 | 130/145 | 185 | 14/19 | M12 | Rp 1/4 |

For product numbers, see page 139.

## MAGNA3 80-40 F

**1 x 230 V, 50/60 Hz**

Proportional pressure

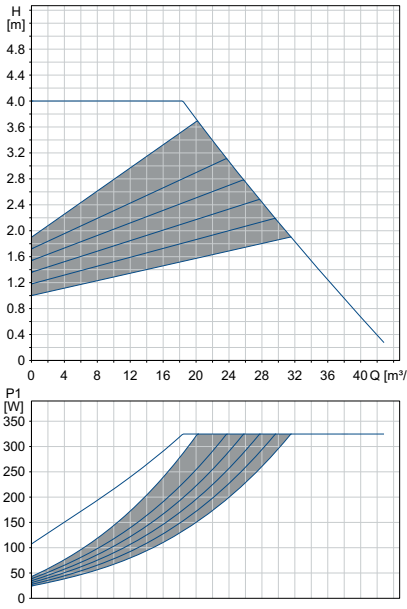


Constant pressure

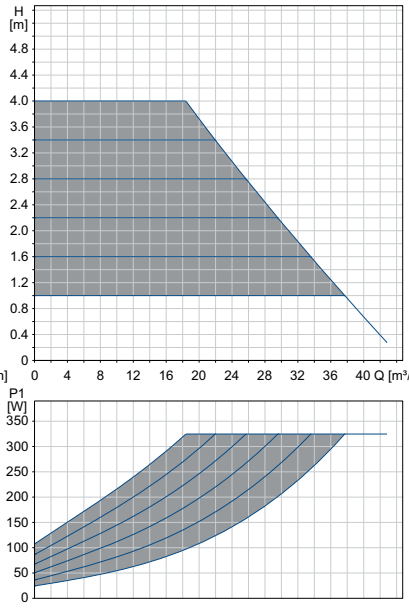


0-10 volt*

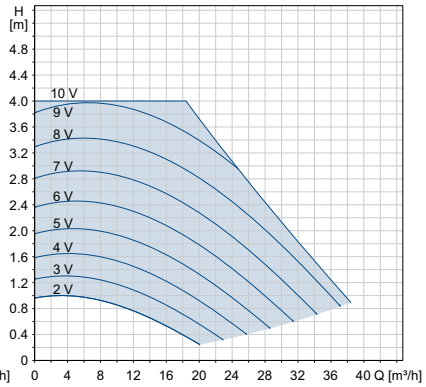


| Speed | P1 [W] | $I_1$ [A] |
|---|---|---|
| **Min.** | 24 | 0.26 |
| **Max.** | 336 | 1.52 |

The pump incorporates overload protection.

| Net weights [kg] | Gross weights [kg] | Ship. vol. [m³] |
|---|---|---|
| 25.8 | 28.8 | 0.07 |

* External setpoint influence shown with a set point of $H_{max}$

Connections: See *Pipe connections*, page 134.

System pressure: Max. 1.0 MPa (10 bar).
Also available as max. 1.6 MPa (16 bar).

Liquid temperature: -10 to +110 °C (TF 110).

Specific EEI: 0.17.

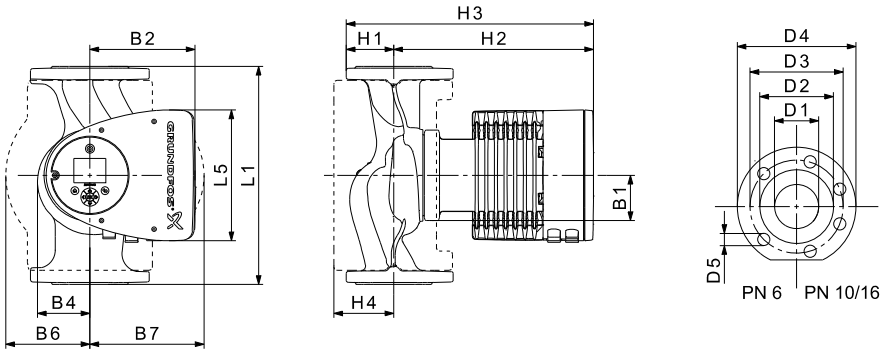


TM05 5291 3612

| Pump type | Dimensions [mm] | | | | | | | | | | | | | | | |
|---|---|---|---|---|---|---|---|---|---|---|---|---|---|---|---|---|
| | L1 | L5 | B1 | B2 | B4 | B6 | B7 | H1 | H2 | H3 | H4 | D1 | D2 | D3 | D4 | D5 |
| MAGNA3 80-40 F | 360 | 204 | 84 | 164 | 73 | 163 | 163 | 96 | 318 | 413 | 115 | 80 | 128 | 150/160 | 200 | 19 |

For product numbers, see page 139.

## MAGNA3 D 80-40 F

**1 x 230 V, 50/60 Hz**

Proportional pressure

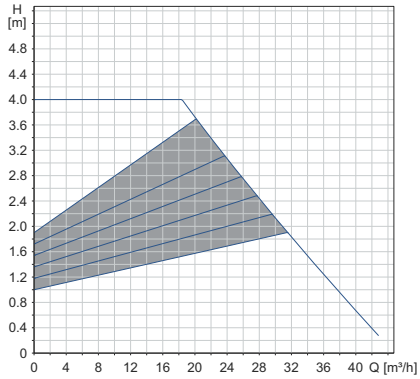


Constant pressure

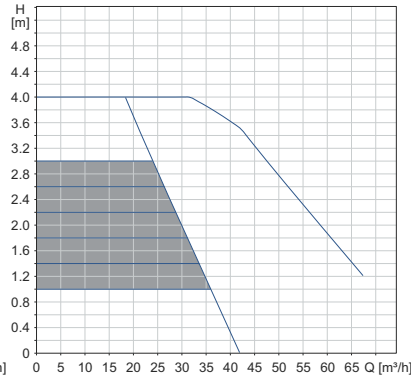


0-10 volt*

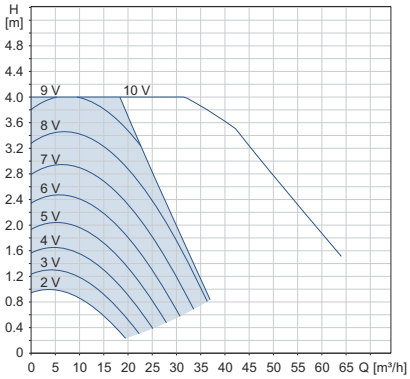


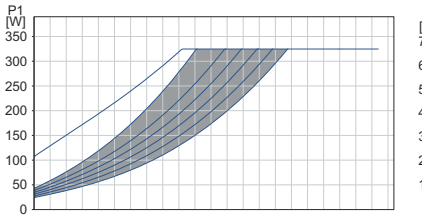


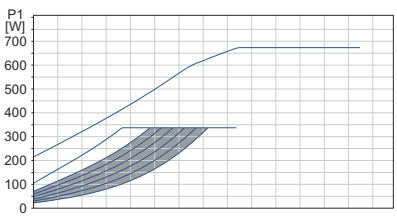


| Speed | P1 [W] | $I_1$ [A] |
|---|---|---|
| **Min.** | 26 | 0.28 |
| **Max.** | 349 | 1.55 |

The pump incorporates overload protection.

| Net weights [kg] | Gross weights [kg] | Ship. vol. [$m^3$] |
|---|---|---|
| 45.8 | 55.8 | 0.07 |

* External setpoint influence shown with a set point of $H_{max}$

Connections: See *Pipe connections*, page 134.

System pressure: Max. 1.0 MPa (10 bar).
Also available as max. 1.6 MPa (16 bar).

Liquid temperature: -10 to +110 °C (TF 110).

Specific EEI: 0.17.

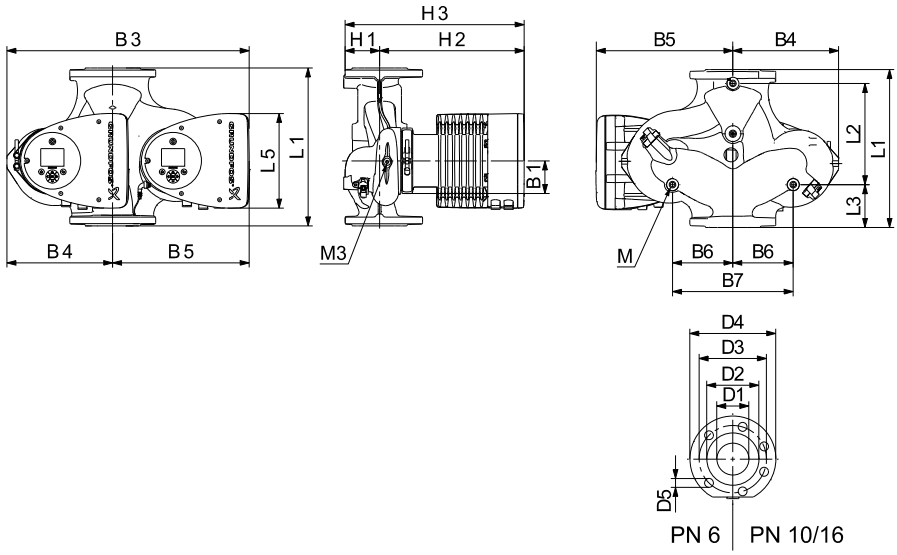


| Pump type | Dimensions [mm] | | | | | | | | | | | | | | | | | | | |
|---|---|---|---|---|---|---|---|---|---|---|---|---|---|---|---|---|---|---|---|---|
| | L1 | L2 | L3 | L4 | L5 | B1 | B3 | B4 | B5 | B6 | B7 | H1 | H2 | H3 | D1 | D2 | D3 | D4 | D5 | M | M3 |
| MAGNA3 D 80-40 F | 360 | 218 | 102 | 102 | 204 | 84 | 538 | 244 | 294 | 130 | 260 | 97 | 318 | 415 | 80 | 128 | 150/160 | 200 | 19 | M12 | Rp 1/4 |

For product numbers, see page 139.

## MAGNA3 80-60 F

## 1 x 230 V, 50/60 Hz

Proportional pressure

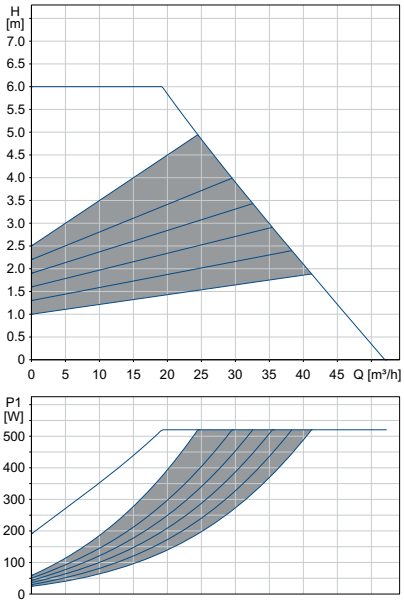


Constant pressure

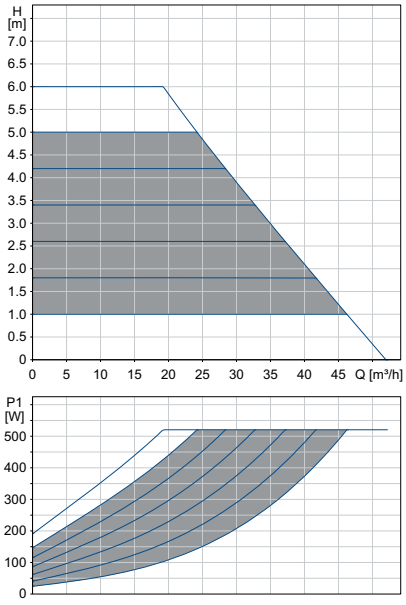


0-10 volt*

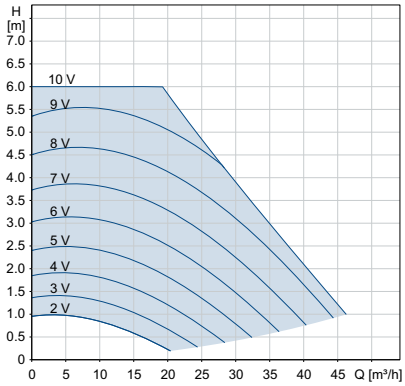


| Speed | P1 [W] | $I_1$ [A] |
|---|---|---|
| **Min.** | 24 | 0.26 |
| **Max.** | 536 | 2.40 |

The pump incorporates overload protection.

| Net weights [kg] | Gross weights [kg] | Ship. vol. [$m^3$] |
|---|---|---|
| 25.8 | 29.1 | 0.07 |

* External setpoint influence shown with a set point of $H_{max}$

Connections: See *Pipe connections*, page 134.

System pressure: Max. 1.0 MPa (10 bar).
Also available as max. 1.6 MPa (16 bar).

Liquid temperature: -10 to +110 °C (TF 110).

Specific EEI: 0.17.

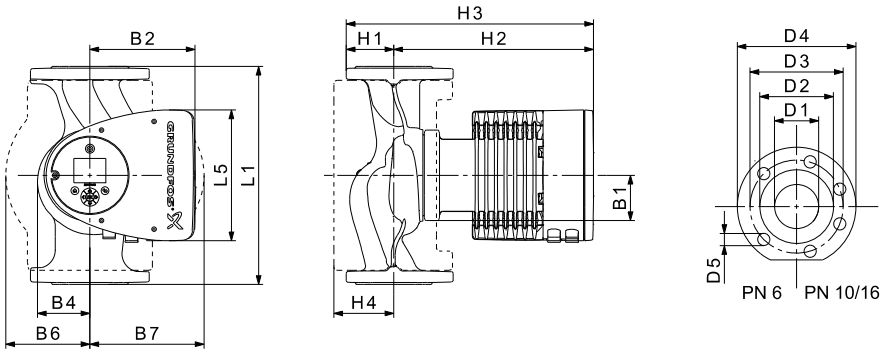


TM05 5291 3612

| Pump type | Dimensions [mm] | | | | | | | | | | | | | | | |
|---|---|---|---|---|---|---|---|---|---|---|---|---|---|---|---|---|
| | L1 | L5 | B1 | B2 | B4 | B6 | B7 | H1 | H2 | H3 | H4 | D1 | D2 | D3 | D4 | D5 |
| MAGNA3 80-60 F | 360 | 204 | 84 | 164 | 73 | 163 | 163 | 96 | 318 | 413 | 115 | 80 | 128 | 150/160 | 200 | 19 |

For product numbers, see page 139.

## MAGNA3 D 80-60 F

**1 x 230 V, 50/60 Hz**

Proportional pressure

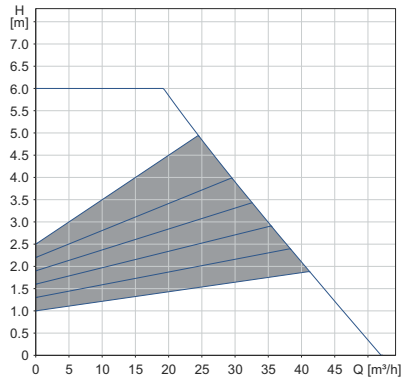


Constant pressure

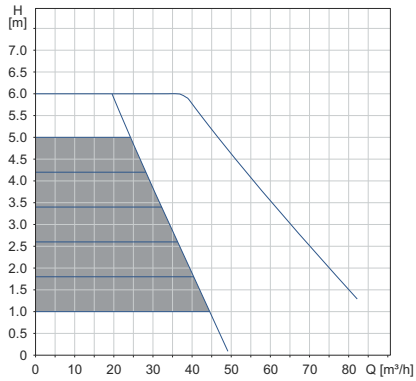


0-10 volt*

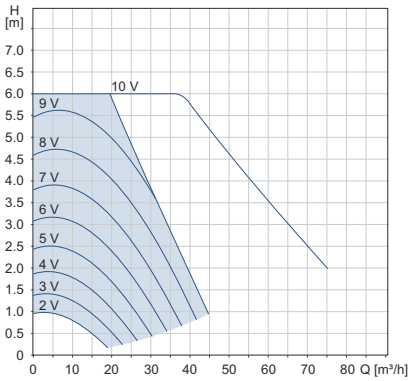


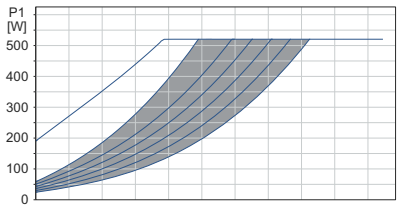


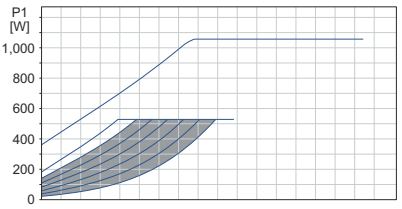


| Speed | P1 [W] | $I_1$ [A] |
|---|---|---|
| **Min.** | 26 | 0.28 |
| **Max.** | 544 | 2.40 |

The pump incorporates overload protection.

| Net weights [kg] | Gross weights [kg] | Ship. vol. [m³] |
|---|---|---|
| 45.8 | 55.8 | 0.07 |

* External setpoint influence shown with a set point of $H_{max}$

Connections: See *Pipe connections*, page 134.

System pressure: Max. 1.0 MPa (10 bar). Also available as max. 1.6 MPa (16 bar).

Liquid temperature: -10 to +110 °C (TF 110).

Specific EEI: 0.18.

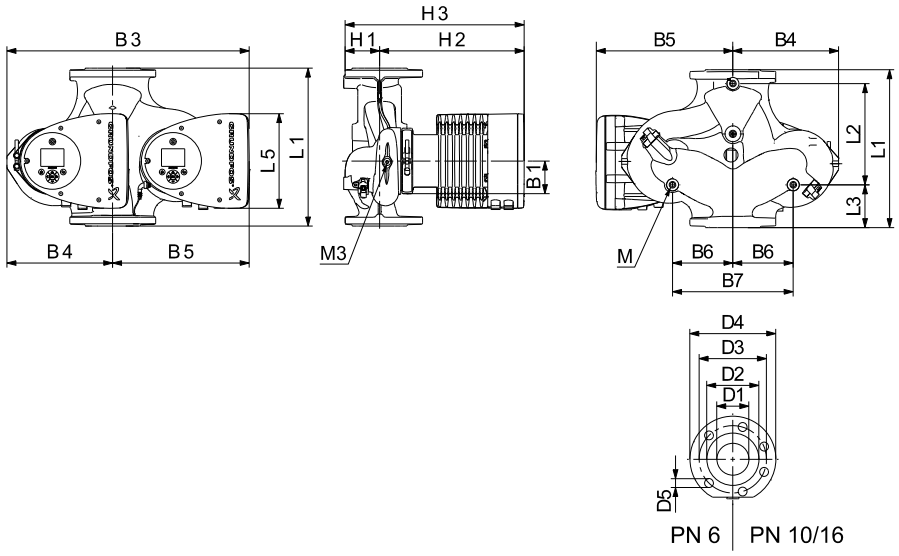


TM05 5366 2213

| Pump type | Dimensions [mm] | | | | | | | | | | | | | | | | | | | | |
|---|---|---|---|---|---|---|---|---|---|---|---|---|---|---|---|---|---|---|---|---|---|
| | L1 | L2 | L3 | L4 | L5 | B1 | B3 | B4 | B5 | B6 | B7 | H1 | H2 | H3 | D1 | D2 | D3 | D4 | D5 | M | M3 |
| MAGNA3 D 80-60 F | 360 | 218 | 102 | 102 | 204 | 84 | 538 | 244 | 294 | 130 | 260 | 97 | 318 | 415 | 80 | 128 | 150/160 | 200 | 19 | M12 | Rp 1/4 |

For product numbers, see page 139.

## MAGNA3 80-80 F

## 1 x 230 V, 50/60 Hz

Proportional pressure

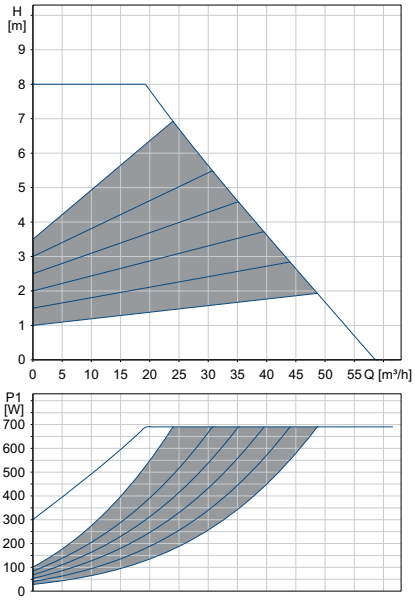


Constant pressure

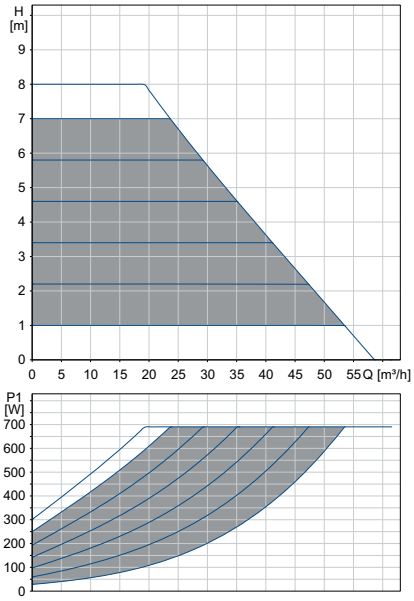


0-10 volt*

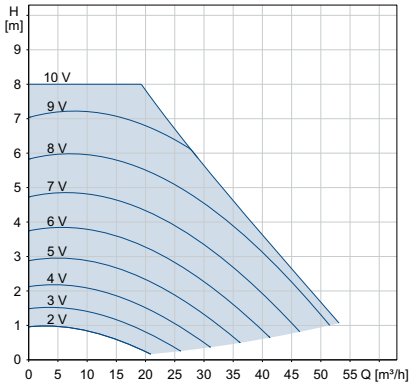


| Speed | P1 [W] | $I_1$ [A] |
|---|---|---|
| **Min.** | 28 | 0.28 |
| **Max.** | 710 | 3.15 |

The pump incorporates overload protection.

| Net weights [kg] | Gross weights [kg] | Ship. vol. [m³] |
|---|---|---|
| 28.0 | 32.0 | 0.07 |

* External setpoint influence shown with a set point of $H_{max}$

Connections: See *Pipe connections*, page 134.

System pressure: Max. 1.0 MPa (10 bar).
Also available as max. 1.6 MPa (16 bar).

Liquid temperature: -10 to +110 °C (TF 110).

Specific EEI: 0.17.

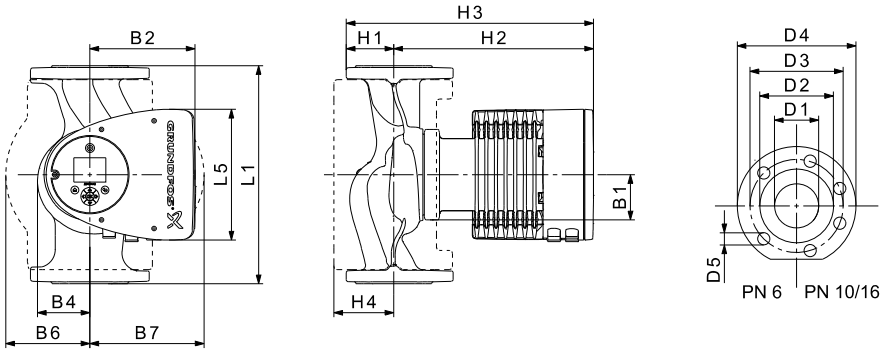


TM05 5291 3612

| Pump type | Dimensions [mm] | | | | | | | | | | | | | | | |
|---|---|---|---|---|---|---|---|---|---|---|---|---|---|---|---|---|
| | L1 | L5 | B1 | B2 | B4 | B6 | B7 | H1 | H2 | H3 | H4 | D1 | D2 | D3 | D4 | D5 |
| MAGNA3 80-80 F | 360 | 204 | 84 | 164 | 73 | 163 | 163 | 96 | 318 | 413 | 115 | 80 | 128 | 150/160 | 200 | 19 |

For product numbers, see page 139.

## MAGNA3 D 80-80 F

**1 x 230 V, 50/60 Hz**

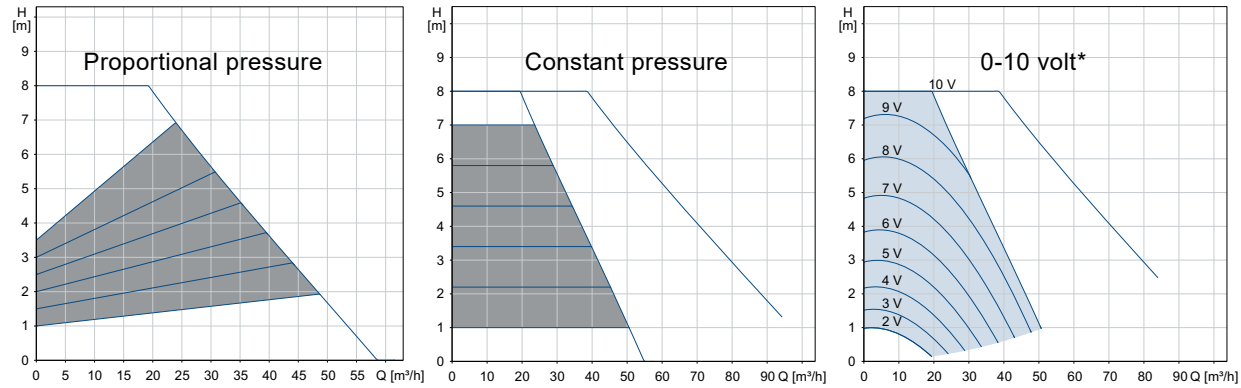


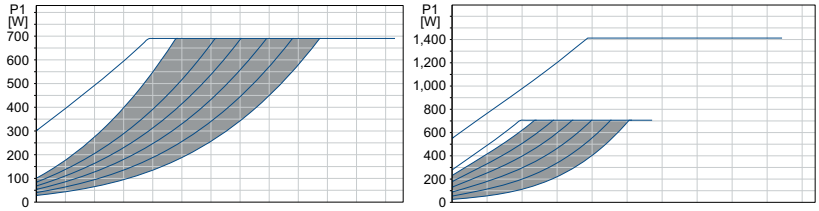


| Speed | P1 [W] | $I_1$ [A] |
|---|---|---|
| **Min.** | 26 | 0.28 |
| **Max.** | 726 | 3.20 |

The pump incorporates overload protection.

| Net weights [kg] | Gross weights [kg] | Ship. vol. [m³] |
|---|---|---|
| 45.8 | 55.8 | 0.07 |

* External setpoint influence shown with a set point of $H_{max}$

Connections: See *Pipe connections*, page 134.

System pressure: Max. 1.0 MPa (10 bar).
Also available as max. 1.6 MPa (16 bar).

Liquid temperature: -10 to +110 °C (TF 110).

Specific EEI: 0.18.

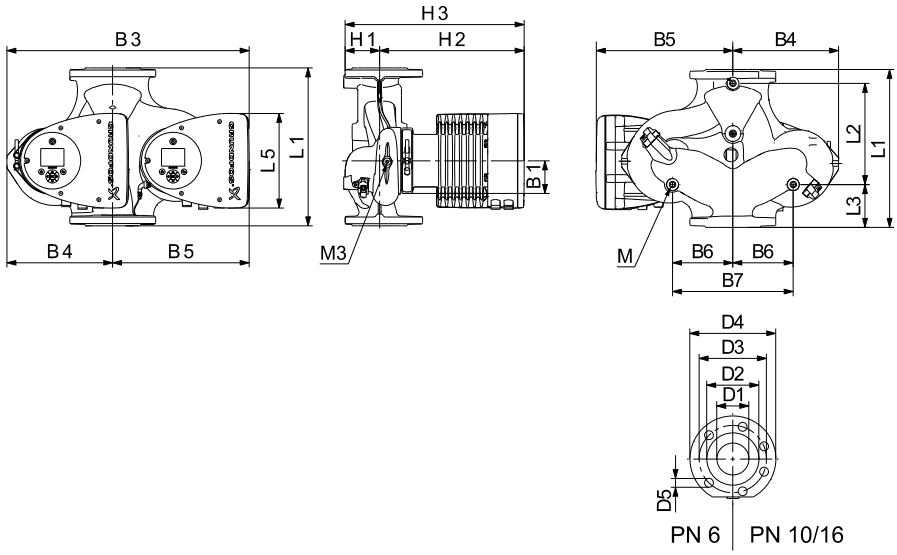


| Pump type | Dimensions [mm] | | | | | | | | | | | | | | | | | | | | |
|---|---|---|---|---|---|---|---|---|---|---|---|---|---|---|---|---|---|---|---|---|---|
| | L1 | L2 | L3 | L4 | L5 | B1 | B3 | B4 | B5 | B6 | B7 | H1 | H2 | H3 | D1 | D2 | D3 | D4 | D5 | M | M3 |
| MAGNA3 D 80-80 F | 360 | 218 | 102 | 102 | 204 | 84 | 538 | 244 | 294 | 130 | 260 | 97 | 318 | 415 | 80 | 128 | 150/160 | 200 | 19 | M12 | Rp 1/4 |

For product numbers, see page 139.

## MAGNA3 80-100 F

## 1 x 230 V, 50/60 Hz

Proportional pressure

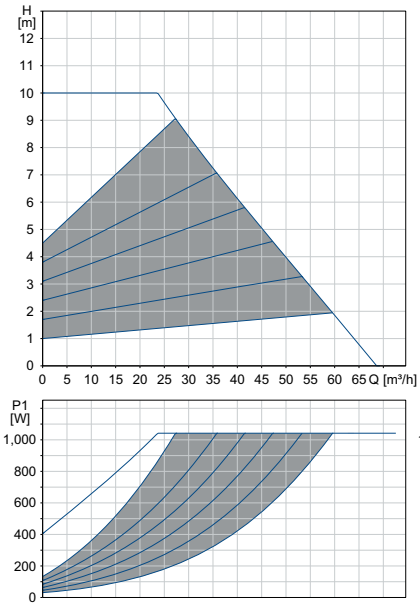


Constant pressure

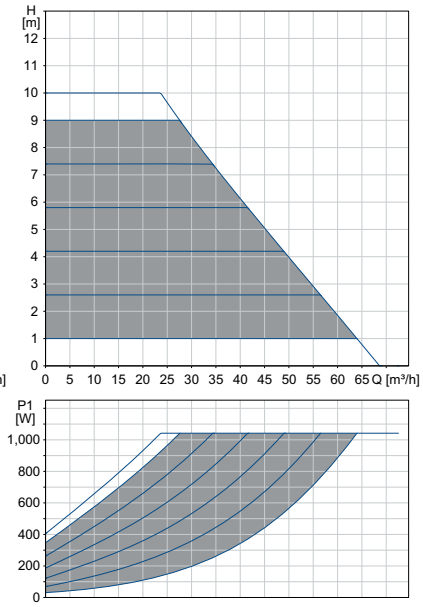


0-10 volt*

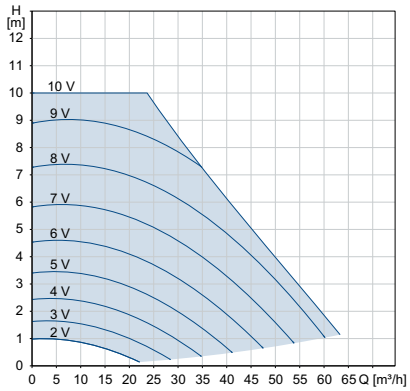


| Speed | P1 [W] | $I_1$ [A] |
|---|---|---|
| **Min.** | 31 | 0.32 |
| **Max.** | 1055 | 4.69 |

The pump incorporates overload protection.

| Net weights [kg] | Gross weights [kg] | Ship. vol. [m³] |
|---|---|---|
| 28.8 | 32.6 | 0.07 |

* External setpoint influence shown with a set point of $H_{max}$

Connections: See *Pipe connections*, page 134.

System pressure: Max. 1.0 MPa (10 bar).
Also available as max. 1.6 MPa (16 bar).

Liquid temperature: -10 to +110 °C (TF 110).

Specific EEI: 0.17.

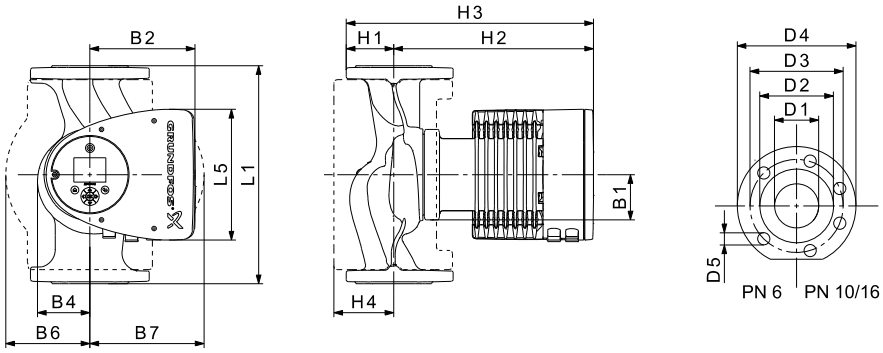


TM05 5291 3612

| Pump type | Dimensions [mm] | | | | | | | | | | | | | | | |
|---|---|---|---|---|---|---|---|---|---|---|---|---|---|---|---|---|
| | L1 | L5 | B1 | B2 | B4 | B6 | B7 | H1 | H2 | H3 | H4 | D1 | D2 | D3 | D4 | D5 |
| MAGNA3 80-100 F | 360 | 204 | 84 | 164 | 73 | 163 | 163 | 96 | 318 | 413 | 115 | 80 | 128 | 150/160 | 200 | 19 |

For product numbers, see page 139.

## MAGNA3 D 80-100 F

## 1 x 230 V, 50/60 Hz

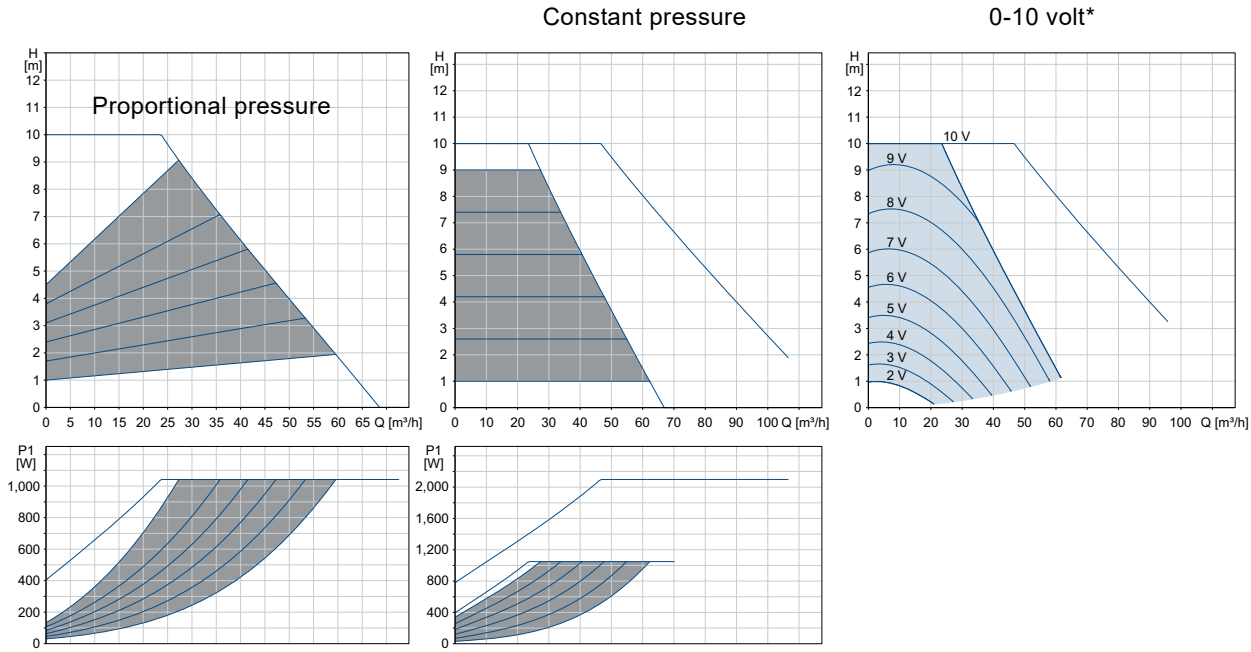


| Speed | P1 [W] | $I_1$ [A] |
|---|---|---|
| **Min.** | 32 | 0.32 |
| **Max.** | 1082 | 4.78 |

The pump incorporates overload protection.

| Net weights [kg] | Gross weights [kg] | Ship. vol. [m³] |
|---|---|---|
| 51.6 | 63.4 | 0.07 |

* External setpoint influence shown with a set point of $H_{max}$

Connections: See *Pipe connections*, page 134.

System pressure: Max. 1.0 MPa (10 bar). Also available as max. 1.6 MPa (16 bar).

Liquid temperature: -10 to +110 °C (TF 110).

Specific EEI: 0.17.

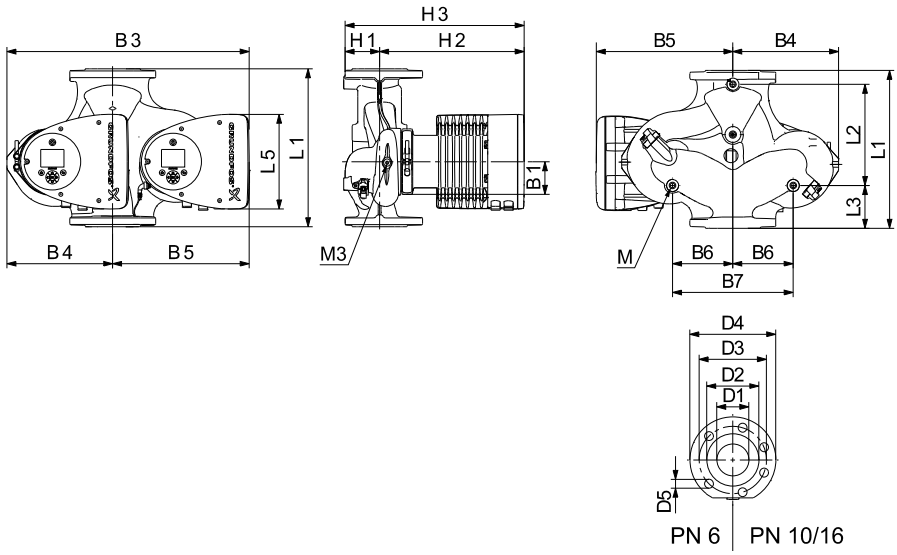


| Pump type | Dimensions [mm] | | | | | | | | | | | | | | | | | | | | |
|---|---|---|---|---|---|---|---|---|---|---|---|---|---|---|---|---|---|---|---|---|---|
| | L1 | L2 | L3 | L4 | L5 | B1 | B3 | B4 | B5 | B6 | B7 | H1 | H2 | H3 | D1 | D2 | D3 | D4 | D5 | M | M3 |
| MAGNA3 D 80-100 F | 360 | 218 | 102 | 102 | 204 | 84 | 538 | 244 | 294 | 130 | 260 | 97 | 318 | 415 | 80 | 128 | 150/160 | 200 | 19 | M12 | Rp 1/4 |

For product numbers, see page 139.

## MAGNA3 80-120 F

**1 x 230 V, 50/60 Hz**

Proportional pressure

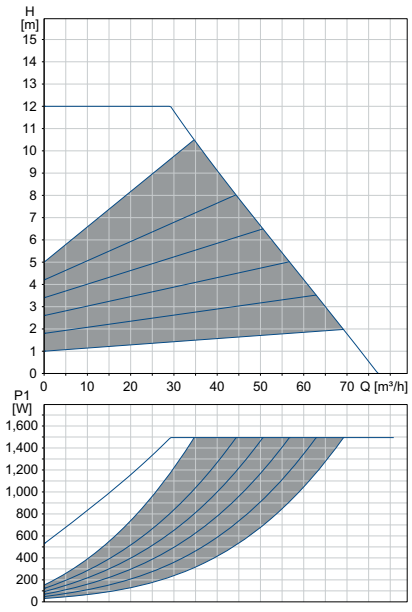


Constant pressure

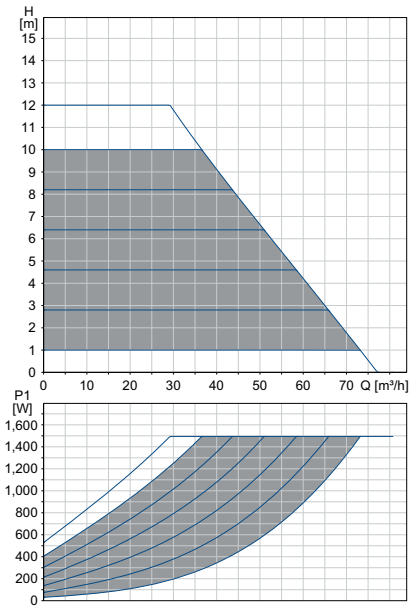


0-10 volt*

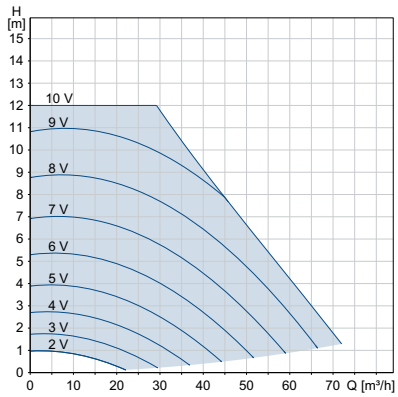


| Speed | P1 [W] | $I_1$ [A] |
|---|---|---|
| **Min.** | 31 | 0.32 |
| **Max.** | 1500 | 6.65 |

The pump incorporates overload protection.

| Net weights [kg] | Gross weights [kg] | Ship. vol. [m³] |
|---|---|---|
| 28.8 | 32.6 | 0.07 |

* External setpoint influence shown with a set point of $H_{max}$

Connections: See *Pipe connections*, page 134.

System pressure: Max. 1.0 MPa (10 bar).
Also available as max. 1.6 MPa (16 bar).

Liquid temperature: -10 to +110 °C (TF 110).

Specific EEI: 0.17.

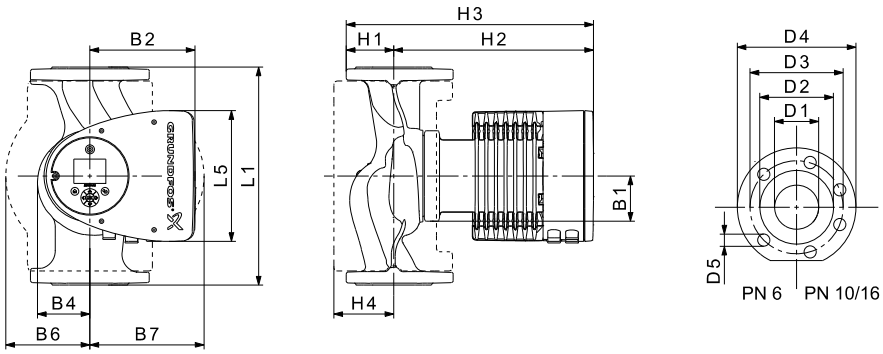


TM05 5291 3612

| Pump type | Dimensions [mm] | | | | | | | | | | | | | | | |
|---|---|---|---|---|---|---|---|---|---|---|---|---|---|---|---|---|
| | L1 | L5 | B1 | B2 | B4 | B6 | B7 | H1 | H2 | H3 | H4 | D1 | D2 | D3 | D4 | D5 |
| MAGNA3 80-120 F | 360 | 204 | 84 | 164 | 73 | 163 | 163 | 96 | 318 | 413 | 115 | 80 | 128 | 150/160 | 200 | 19 |

For product numbers, see page 139.

## MAGNA3 D 80-120 F

## 1 x 230 V, 50/60 Hz

Proportional pressure

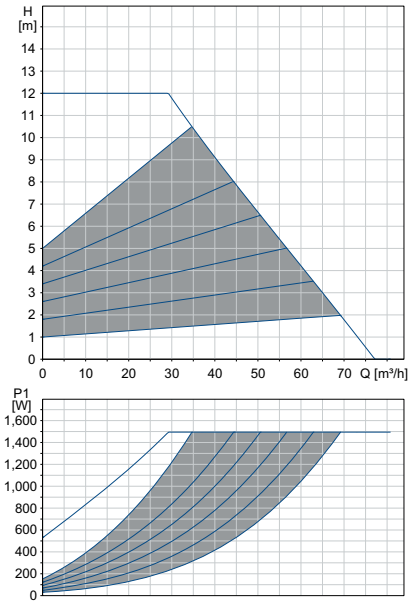


Constant pressure

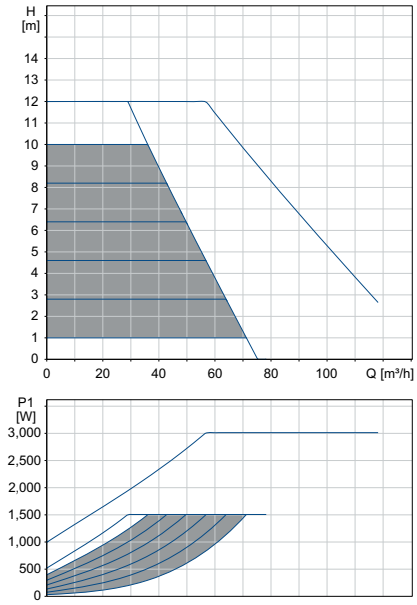


0-10 volt*

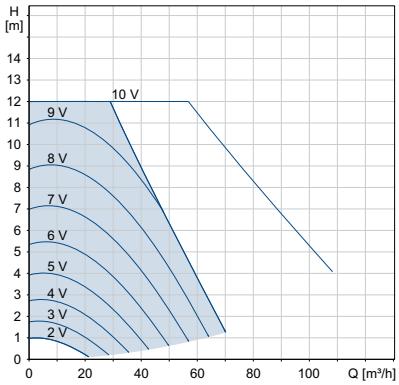


| Speed | P1 [W] | $I_1$ [A] |
|---|---|---|
| **Min.** | 32 | 0.32 |
| **Max.** | 1554 | 6.86 |

The pump incorporates overload protection.

| Net weights [kg] | Gross weights [kg] | Ship. vol. [m³] |
|---|---|---|
| 51.6 | 63.1 | 0.07 |

* External setpoint influence shown with a set point of $H_{max}$

Connections: See *Pipe connections*, page 134.

System pressure: Max. 1.0 MPa (10 bar).
Also available as max. 1.6 MPa (16 bar).

Liquid temperature: -10 to +110 °C (TF 110).

Specific EEI: 0.18.

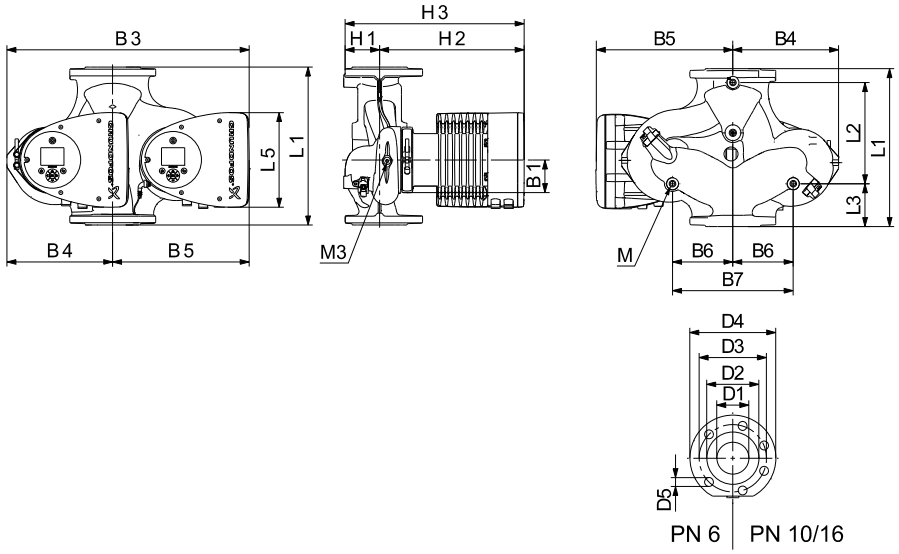


| Pump type | Dimensions [mm] | | | | | | | | | | | | | | | | | | | | |
|---|---|---|---|---|---|---|---|---|---|---|---|---|---|---|---|---|---|---|---|---|---|
| | L1 | L2 | L3 | L4 | L5 | B1 | B3 | B4 | B5 | B6 | B7 | H1 | H2 | H3 | D1 | D2 | D3 | D4 | D5 | M | M3 |
| MAGNA3 D 80-120 F | 360 | 218 | 102 | 102 | 204 | 84 | 538 | 244 | 294 | 130 | 260 | 97 | 318 | 415 | 80 | 128 | 150/160 | 200 | 19 | M12 | Rp 1/4 |

For product numbers, see page 139.

## MAGNA3 100-40 F

## 1 x 230 V, 50/60 Hz

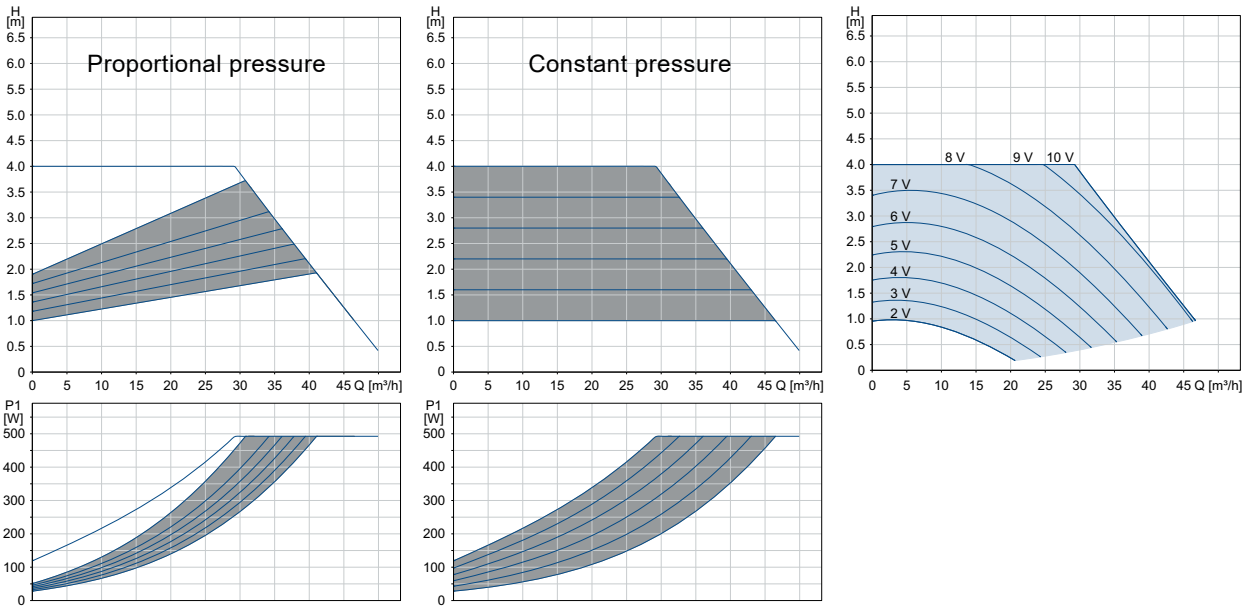


| Speed | P1 [W] | $I_1$ [A] |
|---|---|---|
| **Min.** | 28 | 0.27 |
| **Max.** | 527 | 2.35 |

The pump incorporates overload protection.

| Net weights [kg] | Gross weights [kg] | Ship. vol. [m³] |
|---|---|---|
| 32.3 | 36.4 | 0.1 |

* External setpoint influence shown with a set point of $H_{max}$

Connections: See *Pipe connections*, page 134.

System pressure: Max. 1.0 MPa (10 bar).
Also available as max. 1.6 MPa (16 bar).

Liquid temperature: -10 to +110 °C (TF 110).

Specific EEI: 0.17.

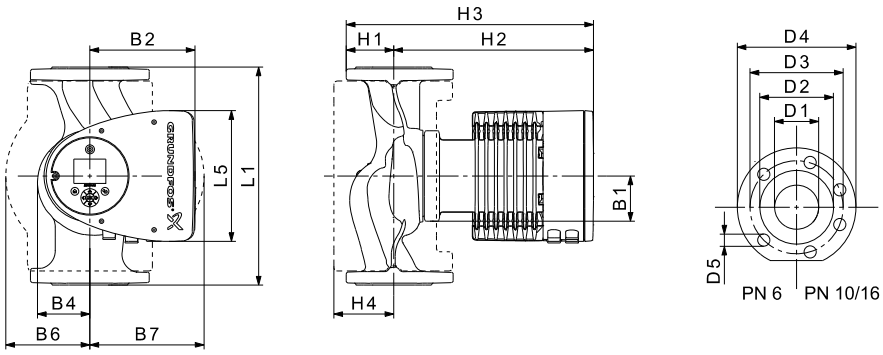


| Pump type | Dimensions [mm] | | | | | | | | | | | | | | | |
|---|---|---|---|---|---|---|---|---|---|---|---|---|---|---|---|---|
| | L1 | L5 | B1 | B2 | B4 | B6 | B7 | H1 | H2 | H3 | H4 | D1 | D2 | D3 | D4 | D5 |
| MAGNA3 100-40 F | 450 | 204 | 84 | 164 | 73 | 178 | 178 | 103 | 330 | 433 | 120 | 100 | 160 | 180 | 220 | 19 |

For product numbers, see page 139.

## MAGNA3 D 100-40 F

**1 x 230 V, 50/60 Hz**

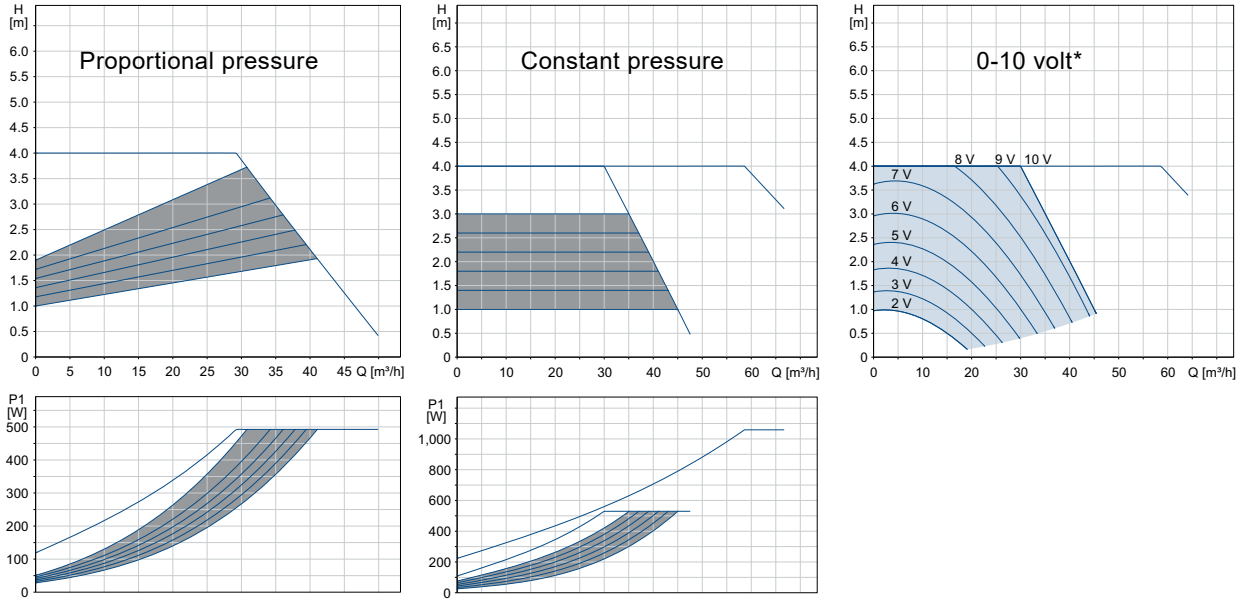


| Speed | P1 [W] | $I_1$ [A] |
|---|---|---|
| **Min.** | 28 | 0.27 |
| **Max.** | 545 | 2.41 |

The pump incorporates overload protection.

| Net weights [kg] | Gross weights [kg] | Ship. vol. [m³] |
|---|---|---|
| 58.8 | 71.3 | 0.1 |

* External setpoint influence shown with a set point of $H_{max}$

Connections: See *Pipe connections*, page 134.

System pressure: Max. 1.0 MPa (10 bar).
Also available as max. 1.6 MPa (16 bar).

Liquid temperature: -10 to +110 °C (TF 110).

Specific EEI: 0.17.

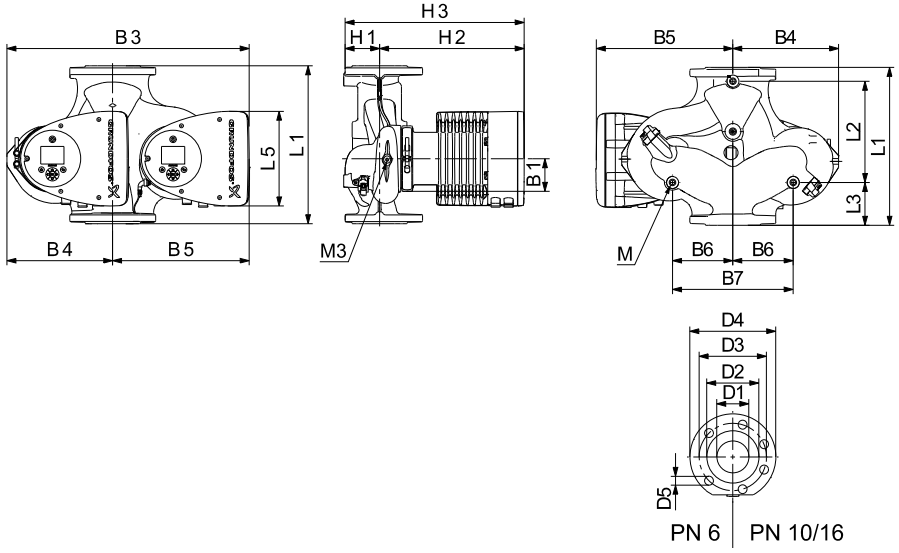


| Pump type | Dimensions [mm] | | | | | | | | | | | | | | | | | | | | |
|---|---|---|---|---|---|---|---|---|---|---|---|---|---|---|---|---|---|---|---|---|---|
| | L1 | L2 | L3 | L4 | L5 | B1 | B3 | B4 | B5 | B6 | B7 | H1 | H2 | H3 | D1 | D2 | D3 | D4 | D5 | M | M3 |
| MAGNA3 D 100-40 F | 450 | 243 | 147 | 147 | 204 | 84 | 551 | 252 | 299 | 135 | 270 | 103 | 330 | 434 | 100 | 160 | 180 | 220 | 19 | M12 | Rp 1/4 |

For product numbers, see page 139.

## MAGNA3 100-60 F

## 1 x 230 V, 50/60 Hz

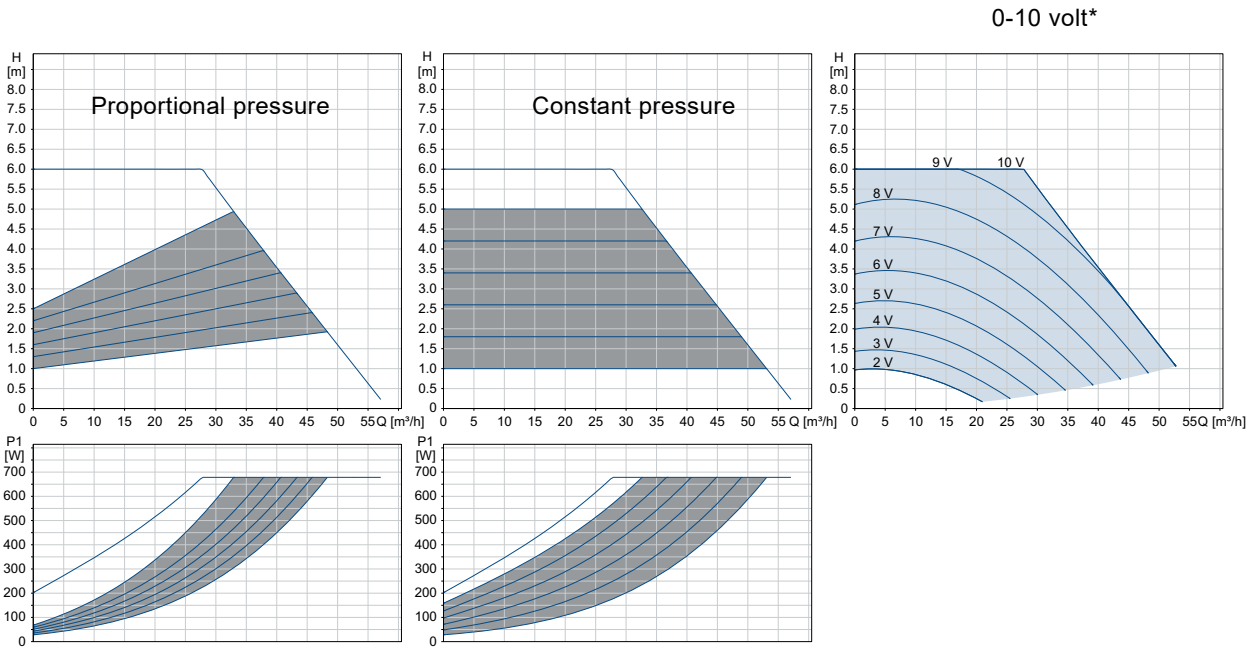


| Speed | P1 [W] | $I_1$ [A] |
|---|---|---|
| **Min.** | 28 | 0.28 |
| **Max.** | 706 | 3.11 |

The pump incorporates overload protection.

| Net weights [kg] | Gross weights [kg] | Ship. vol. [m³] |
|---|---|---|
| 32.3 | 36.4 | 0.1 |

* External setpoint influence shown with a set point of $H_{max}$

Connections: See *Pipe connections*, page 134.

System pressure: Max. 1.0 MPa (10 bar).
Also available as max. 1.6 MPa (16 bar).

Liquid temperature: -10 to +110 °C (TF 110).

Specific EEI: 0.17.

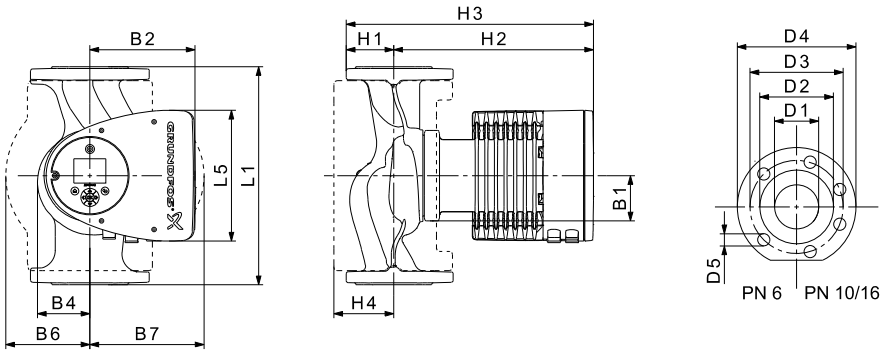


TM05 5291 3612

| Pump type | Dimensions [mm] | | | | | | | | | | | | | | | |
|---|---|---|---|---|---|---|---|---|---|---|---|---|---|---|---|---|
| | L1 | L5 | B1 | B2 | B4 | B6 | B7 | H1 | H2 | H3 | H4 | D1 | D2 | D3 | D4 | D5 |
| MAGNA3 100-60 F | 450 | 204 | 84 | 164 | 73 | 178 | 178 | 103 | 330 | 433 | 120 | 100 | 160 | 180 | 220 | 19 |

For product numbers, see page 139.

## MAGNA3 D 100-60 F

**1 x 230 V, 50/60 Hz**

Proportional pressure

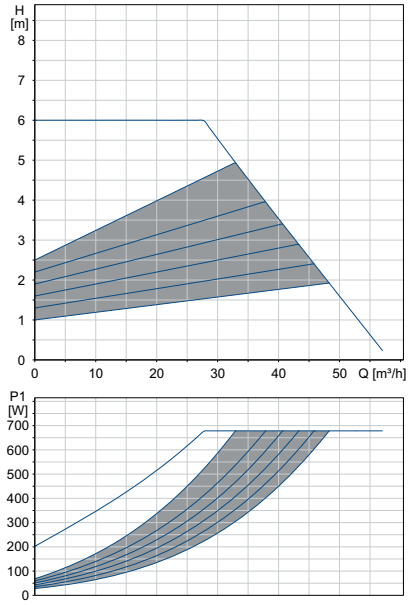


Constant pressure

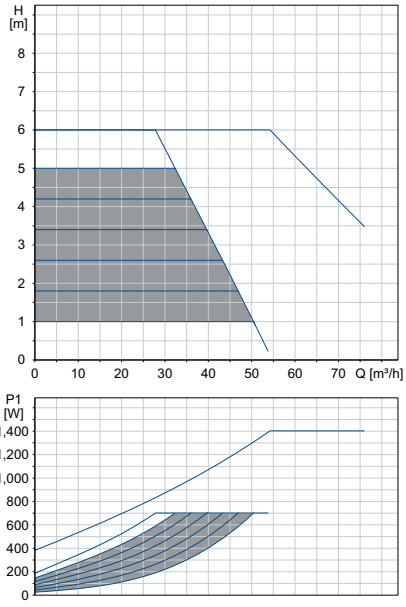


0-10 volt*

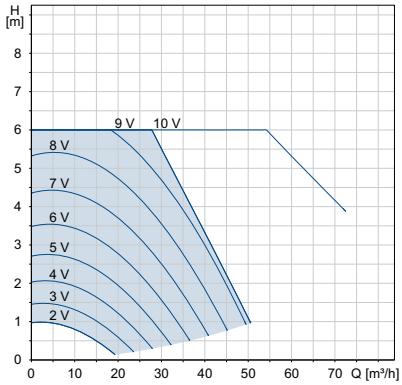


| Speed | P1 [W] | $I_1$ [A] |
|---|---|---|
| **Min.** | 28 | 0.27 |
| **Max.** | 721 | 3.15 |

The pump incorporates overload protection.

| Net weights [kg] | Gross weights [kg] | Ship. vol. [m³] |
|---|---|---|
| 58.8 | 71.3 | 0.1 |

* External setpoint influence shown with a set point of $H_{max}$

Connections: See *Pipe connections*, page 134.

System pressure: Max. 1.0 MPa (10 bar).
Also available as max. 1.6 MPa (16 bar).

Liquid temperature: -10 to +110 °C (TF 110).

Specific EEI: 0.17.

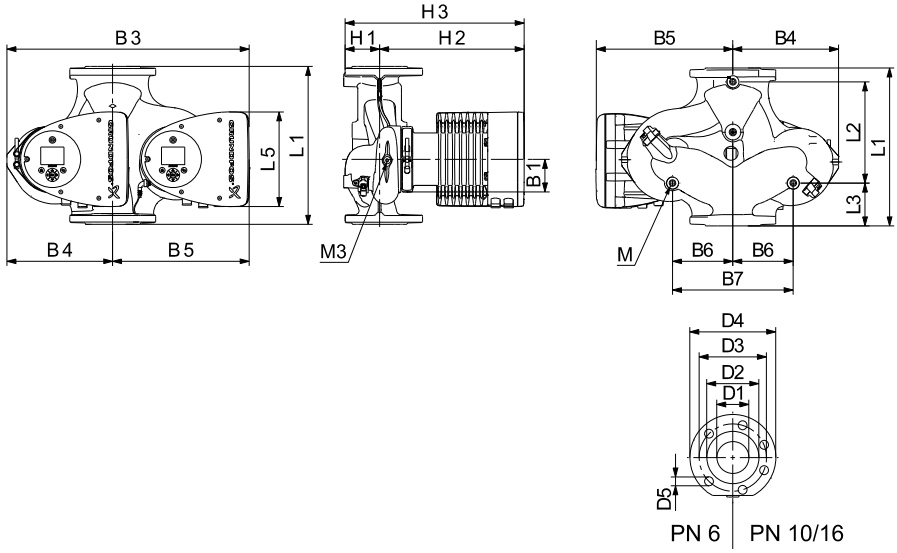


| Pump type | Dimensions [mm] | | | | | | | | | | | | | | | | | | | | |
|---|---|---|---|---|---|---|---|---|---|---|---|---|---|---|---|---|---|---|---|---|---|
| | L1 | L2 | L3 | L4 | L5 | B1 | B3 | B4 | B5 | B6 | B7 | H1 | H2 | H3 | D1 | D2 | D3 | D4 | D5 | M | M3 |
| MAGNA3 D 100-60 F | 450 | 243 | 147 | 147 | 204 | 84 | 551 | 252 | 299 | 135 | 270 | 103 | 330 | 434 | 100 | 160 | 180 | 220 | 19 | M12 | Rp 1/4 |

For product numbers, see page 139.

## MAGNA3 100-80 F

## 1 x 230 V, 50/60 Hz

0-10 volt*

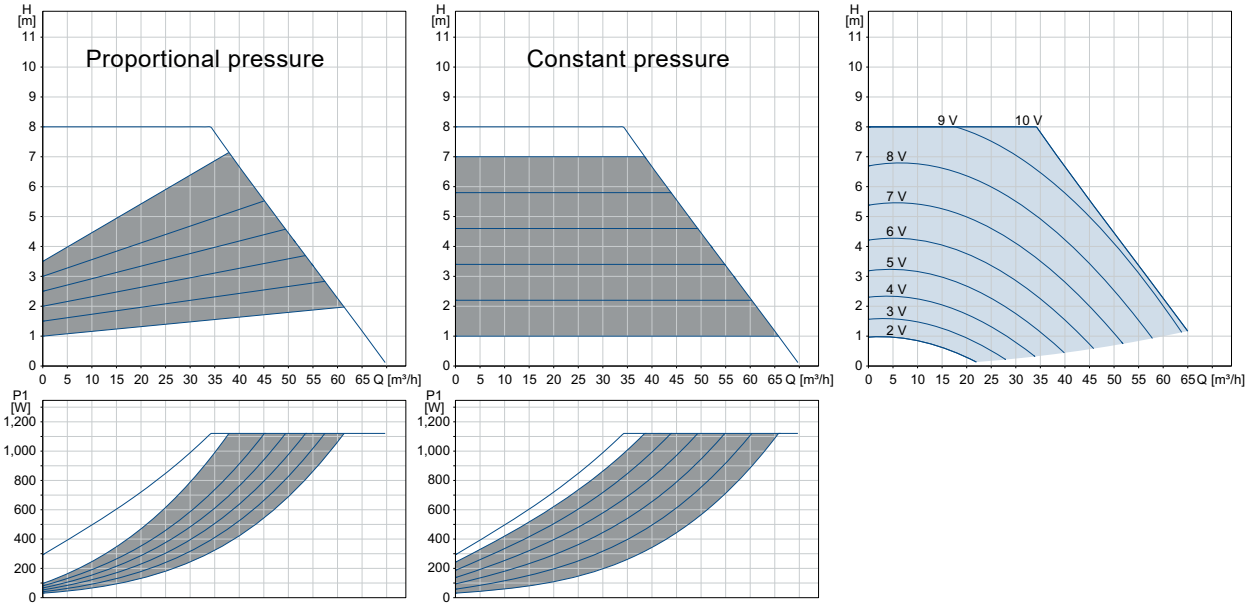


| Speed | P1 [W] | $I_1$ [A] |
|---|---|---|
| **Min.** | 31 | 0.32 |
| **Max.** | 1149 | 5.06 |

The pump incorporates overload protection.

| Net weights [kg] | Gross weights [kg] | Ship. vol. [m³] |
|---|---|---|
| 33.1 | 37.3 | 0.1 |

* External setpoint influence shown with a set point of $H_{max}$

Connections: See *Pipe connections*, page 134.

System pressure: Max. 1.0 MPa (10 bar).
Also available as max. 1.6 MPa (16 bar).

Liquid temperature: -10 to +110 °C (TF 110).

Specific EEI: 0.17.

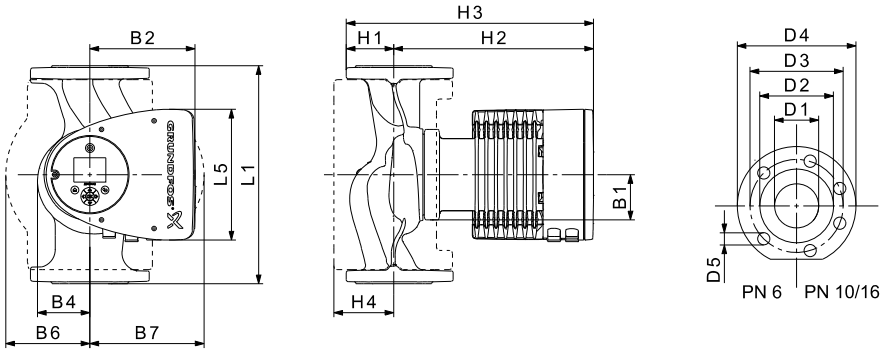


| Pump type | Dimensions [mm] | | | | | | | | | | | | | | | |
|---|---|---|---|---|---|---|---|---|---|---|---|---|---|---|---|---|
| | L1 | L5 | B1 | B2 | B4 | B6 | B7 | H1 | H2 | H3 | H4 | D1 | D2 | D3 | D4 | D5 |
| MAGNA3 100-80 F | 450 | 204 | 84 | 164 | 73 | 178 | 178 | 103 | 330 | 433 | 120 | 100 | 160 | 180 | 220 | 19 |

For product numbers, see page 139.

## MAGNA3 D 100-80 F

**1 x 230 V, 50/60 Hz**

Proportional pressure

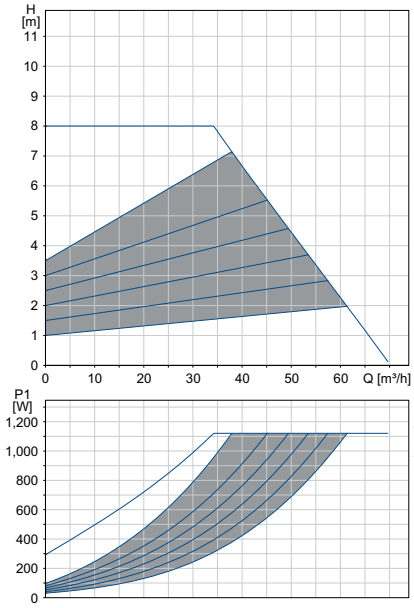


Constant pressure

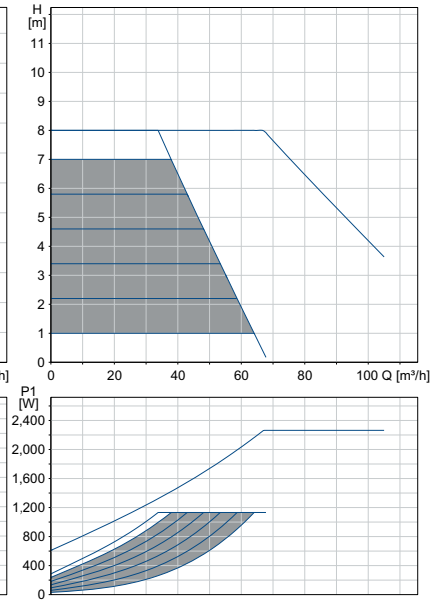


0-10 volt*

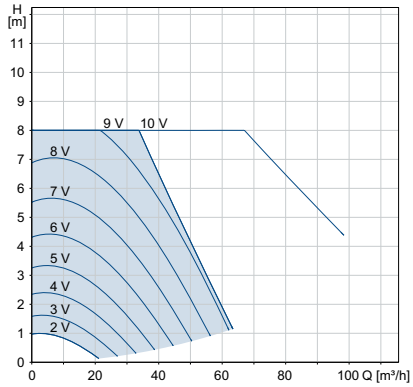


| Speed | P1 [W] | $I_1$ [A] |
|---|---|---|
| **Min.** | 32 | 0.33 |
| **Max.** | 1161 | 5.08 |

The pump incorporates overload protection.

| Net weights [kg] | Gross weights [kg] | Ship. vol. [m³] |
|---|---|---|
| 60.4 | 73.2 | 0.1 |

* External setpoint influence shown with a set point of $H_{max}$

Connections: See *Pipe connections*, page 134.

System pressure: Max. 1.0 MPa (10 bar).
Also available as max. 1.6 MPa (16 bar).

Liquid temperature: -10 to +110 °C (TF 110).

Specific EEI: 0.17.

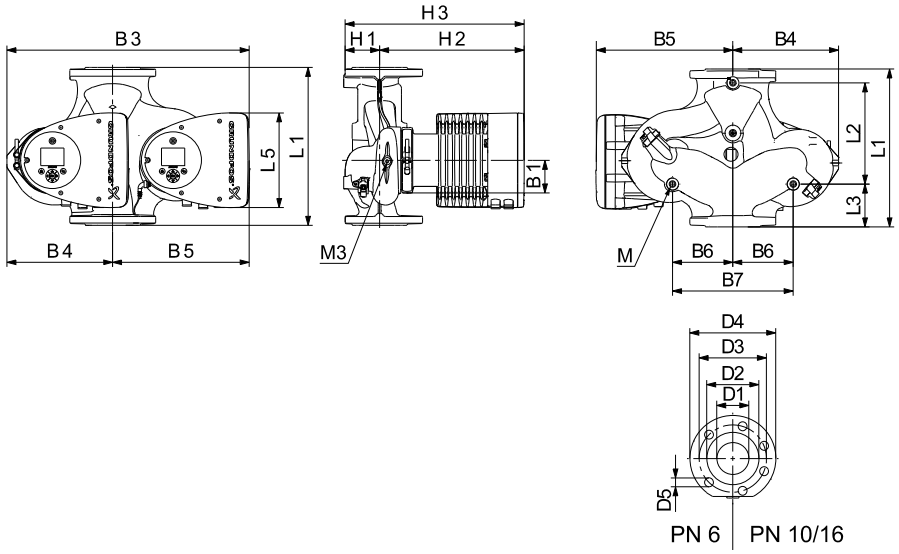


TM05 5366 2213

| Pump type | Dimensions [mm] | | | | | | | | | | | | | | | | | | | | |
|---|---|---|---|---|---|---|---|---|---|---|---|---|---|---|---|---|---|---|---|---|---|
| | L1 | L2 | L3 | L4 | L5 | B1 | B3 | B4 | B5 | B6 | B7 | H1 | H2 | H3 | D1 | D2 | D3 | D4 | D5 | M | M3 |
| MAGNA3 D 100-80 F | 450 | 243 | 147 | 147 | 204 | 84 | 551 | 252 | 299 | 135 | 270 | 103 | 330 | 434 | 100 | 160 | 180 | 220 | 19 | M12 | Rp 1/4 |

For product numbers, see page 139.

## MAGNA3 100-100 F

## 1 x 230 V, 50/60 Hz

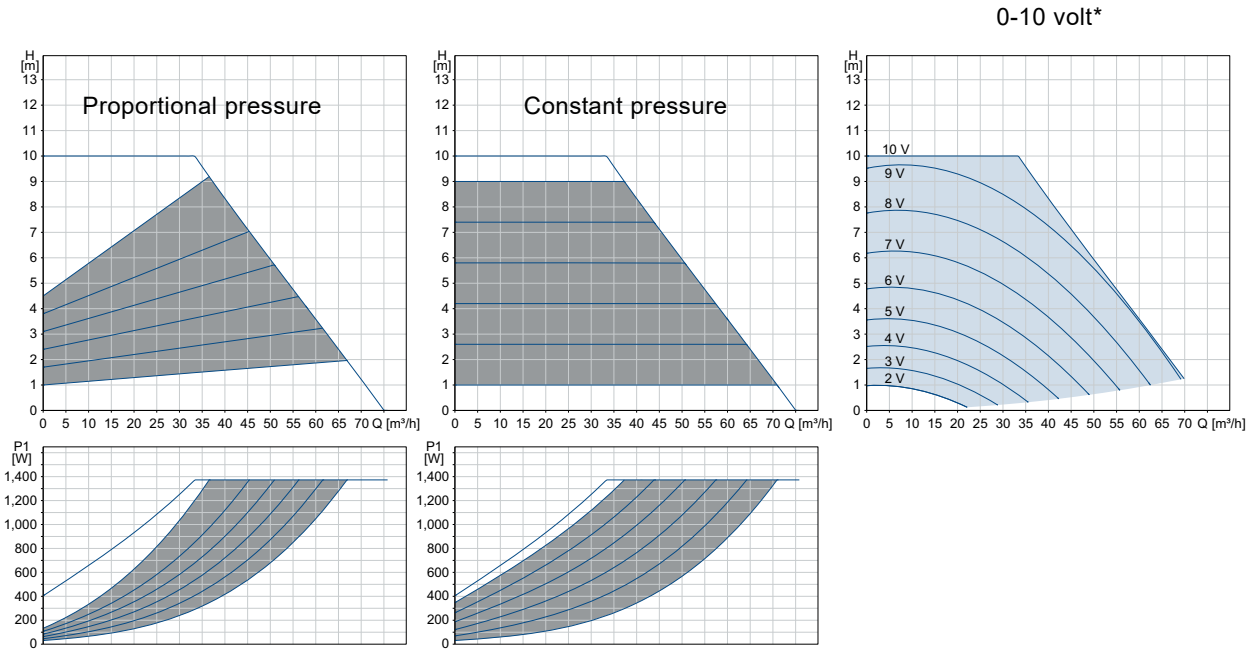


| Speed | P1 [W] | $I_1$ [A] |
|---|---|---|
| **Min.** | 31 | 0.32 |
| **Max.** | 1406 | 6.17 |

The pump incorporates overload protection.

| Net weights [kg] | Gross weights [kg] | Ship. vol. [$m^3$] |
|---|---|---|
| 33.1 | 37.0 | 0.1 |

* External setpoint influence shown with a set point of $H_{max}$

Connections: See *Pipe connections*, page 134.

System pressure: Max. 1.0 MPa (10 bar).
Also available as max. 1.6 MPa (16 bar).

Liquid temperature: -10 to +110 °C (TF 110).

Specific EEI: 0.17.

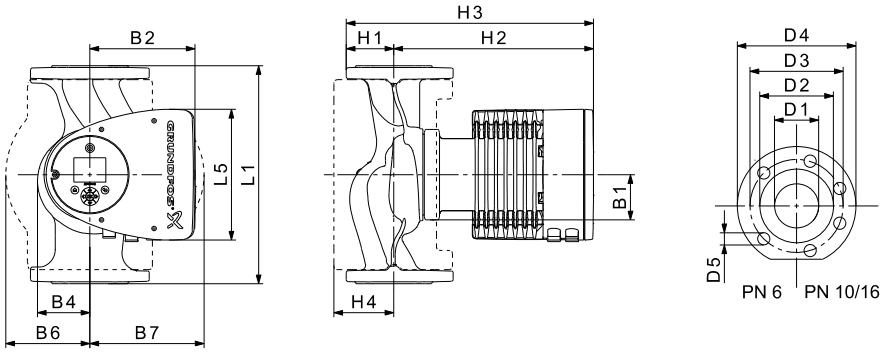


| Pump type | Dimensions [mm] | | | | | | | | | | | | | | | |
|---|---|---|---|---|---|---|---|---|---|---|---|---|---|---|---|---|
| | L1 | L5 | B1 | B2 | B4 | B6 | B7 | H1 | H2 | H3 | H4 | D1 | D2 | D3 | D4 | D5 |
| MAGNA3 100-100 F | 450 | 204 | 84 | 164 | 73 | 178 | 178 | 103 | 330 | 433 | 120 | 100 | 160 | 180 | 220 | 19 |

For product numbers, see page 139.

## MAGNA3 D 100-100 F

**1 x 230 V, 50/60 Hz**

Proportional pressure

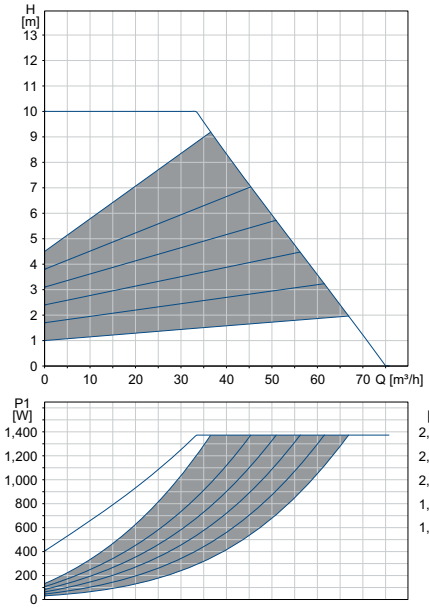


Constant pressure

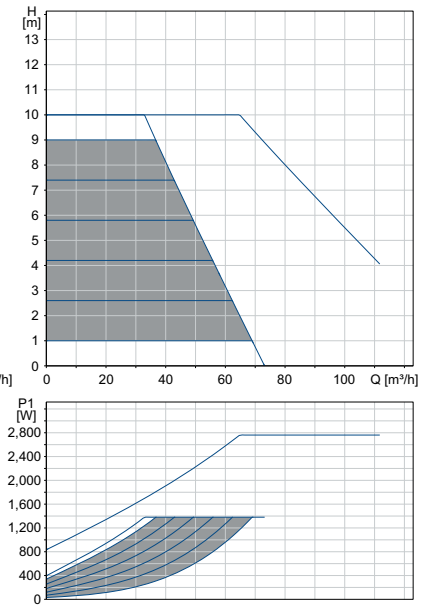


0-10 volt*

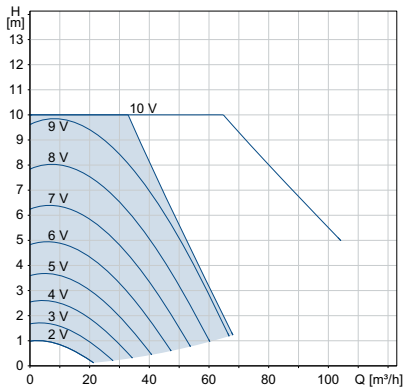


| Speed | P1 [W] | $I_1$ [A] |
|---|---|---|
| **Min.** | 34 | 0.34 |
| **Max.** | 1415 | 6.17 |

The pump incorporates overload protection.

| Net weights [kg] | Gross weights [kg] | Ship. vol. [m³] |
|---|---|---|
| 60.4 | 73.2 | 0.1 |

* External setpoint influence shown with a set point of $H_{max}$

Connections: See *Pipe connections*, page 134.

System pressure: Max. 1.0 MPa (10 bar).
Also available as max. 1.6 MPa (16 bar).

Liquid temperature: -10 to +110 °C (TF 110).

Specific EEI: 0.17.

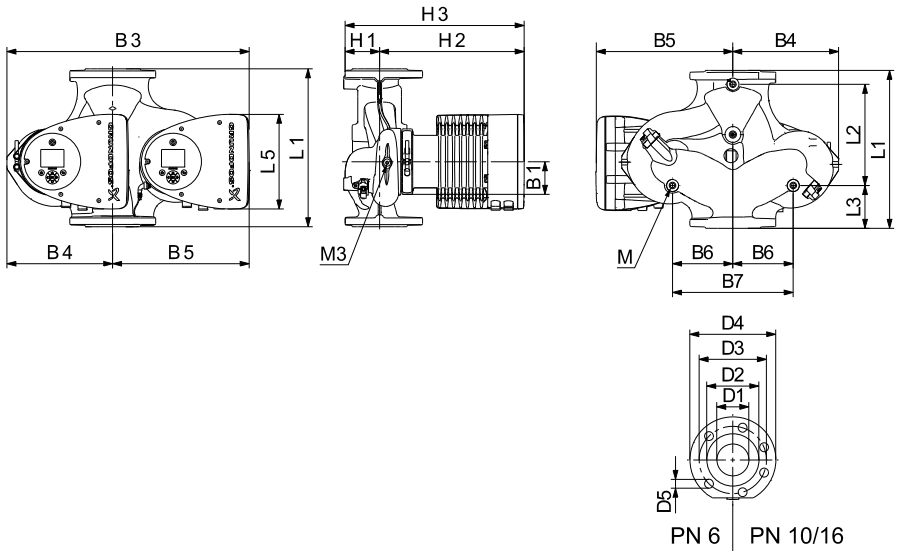


| Pump type | Dimensions [mm] | | | | | | | | | | | | | | | | | | | | |
|---|---|---|---|---|---|---|---|---|---|---|---|---|---|---|---|---|---|---|---|---|---|
| | L1 | L2 | L3 | L4 | L5 | B1 | B3 | B4 | B5 | B6 | B7 | H1 | H2 | H3 | D1 | D2 | D3 | D4 | D5 | M | M3 |
| MAGNA3 D 100-100 F | 450 | 243 | 147 | 147 | 204 | 84 | 551 | 252 | 299 | 135 | 270 | 103 | 330 | 434 | 100 | 160 | 180 | 220 | 19 | M12 | Rp 1/4 |

For product numbers, see page 139.

## MAGNA3 100-120 F

## 1 x 230 V, 50/60 Hz

Proportional pressure

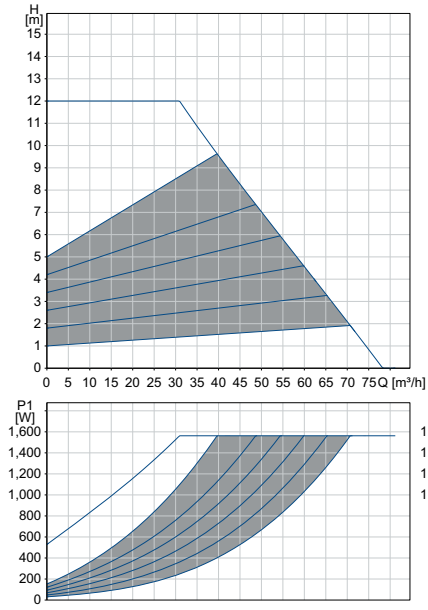


Constant pressure

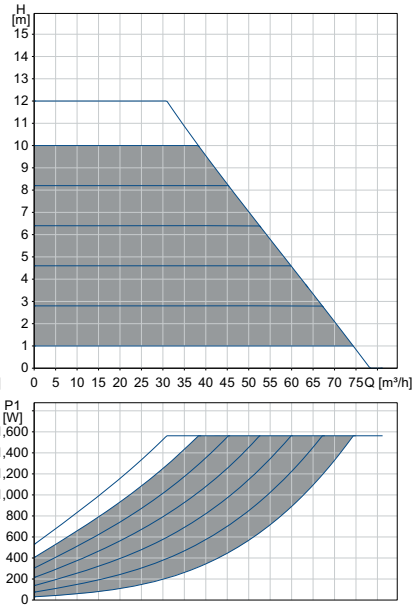


0-10 volt*

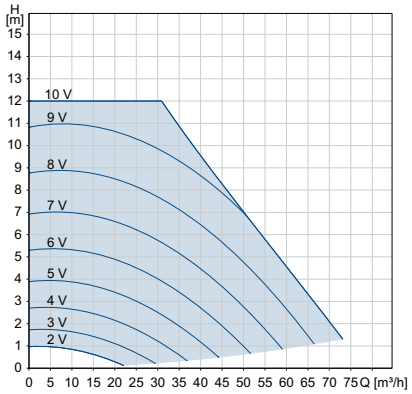


| Speed | P1 [W] | $I_1$ [A] |
|---|---|---|
| **Min.** | 31 | 0.32 |
| **Max.** | 1600 | 7.00 |

The pump incorporates overload protection.

| Net weights [kg] | Gross weights [kg] | Ship. vol. [m³] |
|---|---|---|
| 33.1 | 37.0 | 0.1 |

* External setpoint influence shown with a set point of $H_{max}$

Connections: See *Pipe connections*, page 134.

System pressure: Max. 1.0 MPa (10 bar). Also available as max. 1.6 MPa (16 bar).

Liquid temperature: -10 to +110 °C (TF 110).

Specific EEI: 0.17.

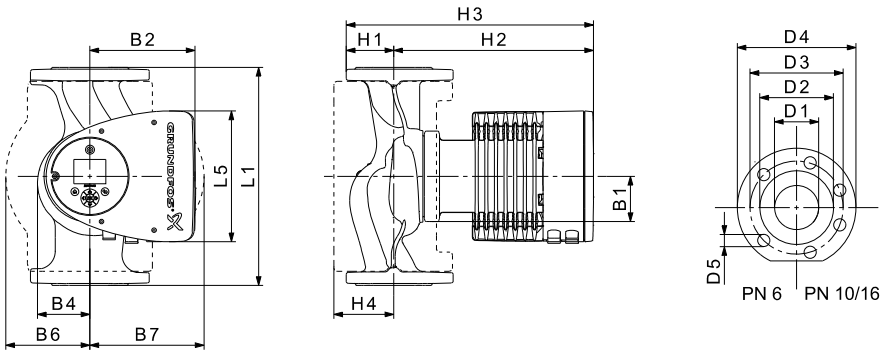


TM05 5291 3612

| Pump type | Dimensions [mm] | | | | | | | | | | | | | | | |
|---|---|---|---|---|---|---|---|---|---|---|---|---|---|---|---|---|
| | L1 | L5 | B1 | B2 | B4 | B6 | B7 | H1 | H2 | H3 | H4 | D1 | D2 | D3 | D4 | D5 |
| MAGNA3 100-120 F | 450 | 204 | 84 | 164 | 73 | 178 | 178 | 103 | 330 | 433 | 120 | 100 | 160 | 180 | 220 | 19 |

For product numbers, see page 139.

## MAGNA3 D 100-120 F

## 1 x 230 V, 50/60 Hz

0-10 volt*

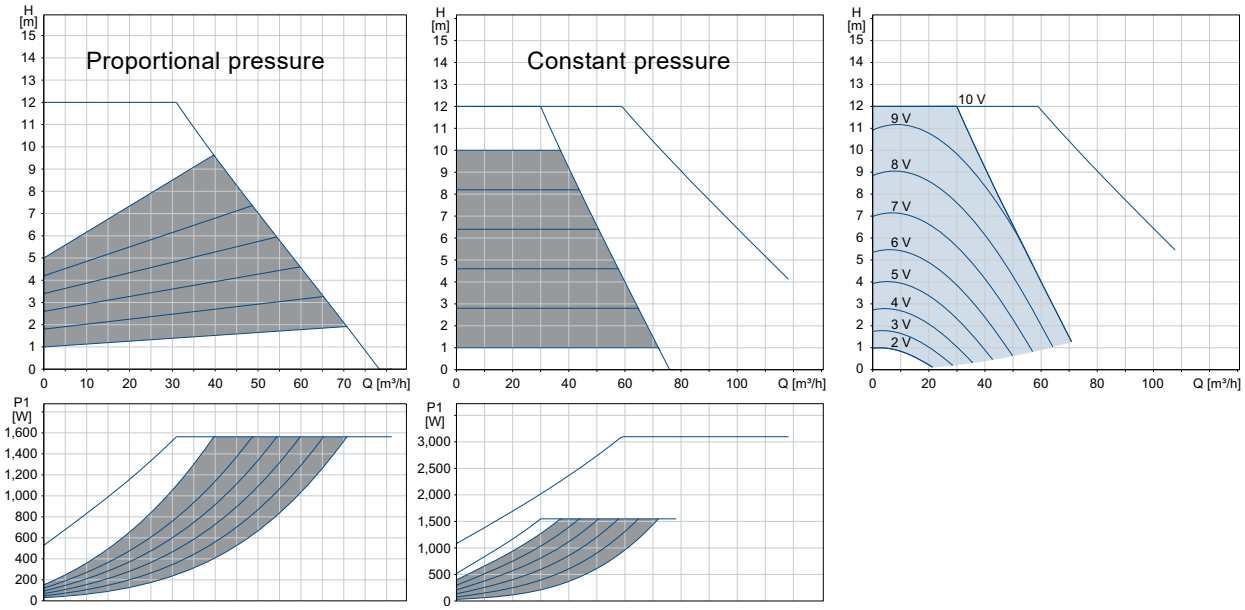


| Speed | P1 [W] | $I_1$ [A] |
|---|---|---|
| **Min.** | 35 | 0.35 |
| **Max.** | 1586 | 6.89 |

The pump incorporates overload protection.

| Net weights [kg] | Gross weights [kg] | Ship. vol. [m³] |
|---|---|---|
| 60.4 | 72.8 | 0.1 |

* External setpoint influence shown with a set point of $H_{max}$

Connections: See *Pipe connections*, page 134.

System pressure: Max. 1.0 MPa (10 bar). Also available as max. 1.6 MPa (16 bar).

Liquid temperature: -10 to +110 °C (TF 110).

Specific EEI: 0.17.

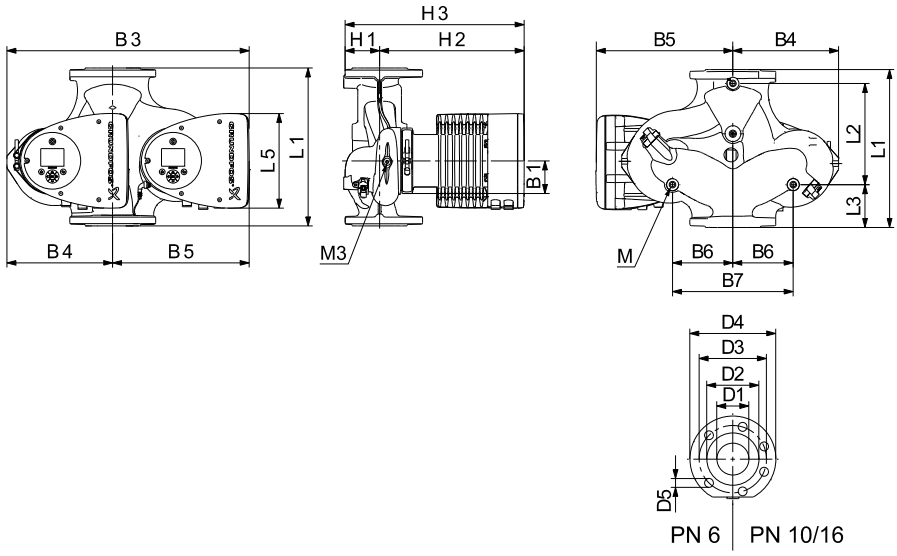


| Pump type | Dimensions [mm] | | | | | | | | | | | | | | | | | | | | |
|---|---|---|---|---|---|---|---|---|---|---|---|---|---|---|---|---|---|---|---|---|---|
| | L1 | L2 | L3 | L4 | L5 | B1 | B3 | B4 | B5 | B6 | B7 | H1 | H2 | H3 | D1 | D2 | D3 | D4 | D5 | M | M3 |
| MAGNA3 D 100-120 F | 450 | 243 | 147 | 147 | 204 | 84 | 551 | 252 | 299 | 135 | 270 | 103 | 330 | 434 | 100 | 160 | 180 | 220 | 19 | M12 | Rp 1/4 |

For product numbers, see page 139.

# 11. Accessories

## Insulating shells for applications with ice buildup

The accessory is for single-head MAGNA pumps used in applications with ice buildup.

The accessory set consists of two polyurethane (PUR) shells and metal clamps to ensure tight assembly.


**Fig. 61** Fitting the insulating shells to a MAGNA3 pump

The dimensions of the insulating shells differ from those of the insulating shells for heating systems. You can use the insulating shells for both stainless-steel and cast-iron pumps.

| Pump type | Product number |
|---|---|
| MAGNA3 25-40/60/80/100/120 (N) | 98354534 |
| MAGNA3 32-40/60/80/100/120 (N) | 98354535 |
| MAGNA3 32-40/60/80/100 F (N) | 98354536 |
| MAGNA3 32-120 F (N) | 98063287 |
| MAGNA3 40-40/60 F (N) | 98354537 |
| MAGNA3 40-80/100 F (N) | 98063288 |
| MAGNA3 40-120/150/180 F (N) | 98145675 |
| MAGNA3 50-40/60/80 F (N) | 98063289 |
| MAGNA3 50-100/120/150/180 F (N) | 98145676 |
| MAGNA3 65-40/60/80/100/120 F (N) | 96913593 |
| MAGNA3 65-150 F (N)* | 99608813 |
| MAGNA3 80-40/60/80/100/120 F* | 98134265 |
| MAGNA3 100-40/60/80/100/120 F* | 96913589 |

* If the control box of the pump is turned, the insulating shells are not applicable. Please contact Grundfos.

Specifications:

- Specific volume resistance greater than or equal to $10^{15}$ Ωcm, DIN 60093
- thermal conductivity at 10 °C 0.036 W/mK and at 40 °C 0.039 W/mK, DIN 52612
- density 33 ± 5 kg/m$^3$, ISO 845
- working temperature range -40 to +90 °C, ISO 2796.

## Cable glands, M16

Kit with 10 M16 cable glands is suitable for cable diameters between 2.5 - 8 mm.

| Kit | Product number |
|---|---|
| M16 cable glands, 10 pcs. | 99502646 |

## CIM modules

A CIM module is an add-on Communication Interface Module. The CIM module enables data transmission between the pump and an external system, for example a BMS or SCADA system.

The CIM module communicates via fieldbus protocols.

The following CIM modules are available:

| Module | Fieldbus protocol | Product number |
|---|---|---|
| CIM 050 | GENIbus | 96824631 |
| CIM 100 | LonWorks | 96824797 |
| CIM 150 | PROFIBUS DP | 96824793 |
| CIM 200 | Modbus RTU | 96824796 |
| CIM 250 | GSM/GPRS | 96824795 |
| CIM 260 | EU 3G/4G cellular | 99439302 |
| CIM 270 | GRM | 96898815 |
| CIM 280 | GRM 3G/4G | 99439724 |
| CIM 300 | BACnet MS/TP | 96893770 |
| CIM 500 | Ethernet | 98301408 |

**Note:** Use booster functional profiles for twin-head pumps.

For further information about data communication via CIM modules, see the CIM documentation available in Grundfos Product Center.

### Location of CIM module

The CIM module is fitted behind the front cover. See fig. 62.

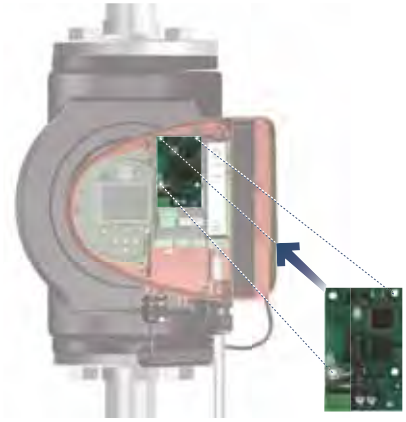


**Fig. 62** Location of CIM module

For installation instructions, please go to:

net.grundfos.com/qr/i/98091805

### Reuse of CIM modules

You can reuse a CIM module in a CIU unit used together with Grundfos MAGNA in MAGNA3. You must re-configure the CIM module before you use it in a MAGNA3 pump. Contact your local Grundfos company.

TM05 2911 1312

**Fig. 63** Reusing CIM modules

### ALPHA plug accessories


TM06 5823 0116

**Fig. 64** ALPHA plugs

| Pos. | Description | Product number |
|---|---|---|
| 1 | ALPHA plug, standard plug connection | 98284561 |
| 2 | ALPHA angle plug, standard angle plug connection | 98610291 |
| 3 | ALPHA plug, 90 ° bend, including 4 m cable | 96884669 |

## Grundfos Remote Management

| Application | Description | Product number |
|---|---|---|
| CIM 270 | Grundfos Remote Management (requires a contract with Grundfos and a SIM card). | 96898815 |
| GSM antenna for roof mounting | Antenna for use on top of metal cabinets.<br>Vandal-proof.<br>2-metre cable.<br>Quad band (global use). | 97631956 |
| GSM antenna for desk mounting | Antenna for general-purpose application, for example inside plastic cabinets.<br>To be fixed with the double-adhesive tape supplied.<br>4-metre cable.<br>Quad band (global use). | 97631957 |

For a GRM contract, contact your local Grundfos company.

## Grundfos GO Remote

Grundfos GO Remote is used for infrared or radio communication with the pumps.

### MI 301

The Grundfos GO Remote MI 301 module has built-in infrared and radio communication. Use MI 301 in conjunction with an Android or iOS-based smart device with a Bluetooth connection. MI 301 has a rechargeable Li-ion battery and must be charged separately.

TM05 3890 1712

**Fig. 65** MI 301

Supplied with the product:

- Grundfos MI 301
- battery charger
- quick guide.

### Product numbers

| Grundfos GO Remote variant | Product number |
|---|---|
| Grundfos MI 301 | 98046408 |

# External Grundfos sensors

### Combined relative-pressure and temperature transmitter

| Sensor | Type | Supplier | Measuring range [bar] | Measuring range [°C] | Transmitter output [VDC] | Power supply [VDC] | Process connection | Product number |
|---|---|---|---|---|---|---|---|---|
| Combined pressure and temperature sensor | RPI T2 | Grundfos | 0-16 | -10/+120 | 0-10 | 16.6 - 30 | G 1/2 | 98355521 |

**Note:** MAGNA3 has only one analog input.

## DPI V.2 transmitter

### Combined differential-pressure and temperature transmitter

Scope of delivery:

- DPI V.2 transmitter
- open 2 m cable with M12 connection in one end
- capillary tube with fitting
- quick guide.

TM04 7866 2510

**Fig. 66** DPI V.2 transmitter

| Sensor | Measuring range [bar] | Measuring range [°C] | Transmitter output | Power supply [VDC] | Temperature measurement | O-ring EPDM* | Process connection | Product number |
|---|---|---|---|---|---|---|---|---|
| Grundfos DPI | 0 - 0.6 | 0-100 | 4-20 mA | 12.5 - 30 | | • | | 97747194 |
| | | | 0-10 VDC | 16.5 - 30 | • | • | | 97747202 |
| Grundfos DPI | 0 - 1.0 | 0-100 | 4-20 mA | 12.5 - 30 | | • | G 1/2 | 97747195 |
| | | | 0-10 VDC | 16.5 - 30 | • | • | | 97747203 |
| Grundfos DPI | 0 - 1.6 | 0-100 | 4-20 mA | 12.5 - 30 | | • | G 1/2 | 97747196 |
| | | | 0-10 VDC | 16.5 - 30 | • | • | | 97747204 |
| Grundfos DPI | 0 - 2.5 | 0-100 | 4-20 mA | 12.5 - 30 | | • | G 1/2 | 97747197 |
| | | | 0-10 VDC | 16.5 - 30 | • | • | | 97747205 |

* **Note:** EPDM: approved for potable water.

# Cable for sensors

| Description | Length [m] | Product number |
|---|---|---|
| Screened cable | 2.0 | 98374260 |
| | 5.0 | 98374271 |

## Blanking flange

The accessory is used to blank off the opening when one of the pump heads of a twin-head pump is removed for service to enable uninterrupted operation of the other pump.

The accessory set consists of a blanking flange and a fastener set.

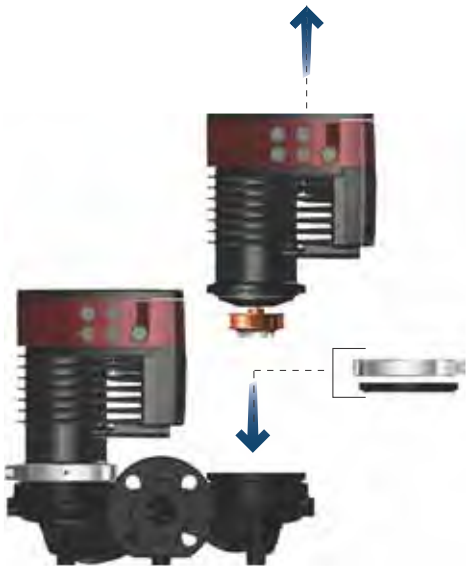

TM06 8518 0817

**Fig. 67** Position of blanking flange

| Pump type | Product number |
|---|---|
| MAGNA3 D 32-40/60/80/100 (F)<br>MAGNA3 D 40-40/60 F | 98159373 |
| MAGNA3 D 32-120 F<br>MAGNA3 D 40-80/100/120/150/180 F<br>MAGNA3 D 50-40/60/80/100/120/150/180 F<br>MAGNA3 D 65-40/60/80/100/120/150 F<br>MAGNA3 D 80-40/60/80/100/120 F<br>MAGNA3 D 100-40/60/80/100/120 F | 98159372 |

## Pipe connections

The accessory is designed to go from the pump to the pipe, working as an adapter with a specific extension length depending on the adapter type.

The accessory set includes everything you need for installation.

### Thread-thread adapters

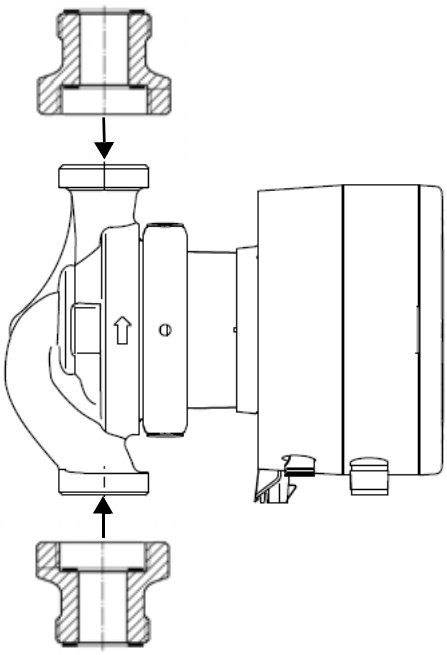

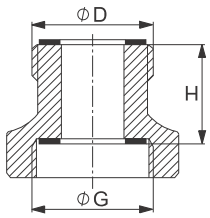


Figure 1

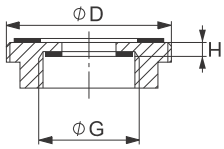


Figure 2

**Fig. 68** Example of thread-thread adapters

| New pump connection G | Union nut connection D | Adapter length H [mm] | Adapter type | Figure | Material | Product number PN 10 |
|---|---|---|---|---|---|---|
| G 1 1/2 | G 1 1/2 | 1 x 70 | A 4 | 1 | Cast iron (GG) | 535043 |
| | G 1 1/2 | 1 x 25 | A 5 | 1 | Cast iron (GG) | 535044 |
| | G 2 | 2 x 0 | A 6 | 2 | Brass (Ms) | 535045 |
| | G 2 | 2 x 5 | A 7 | 2 | Bronze (Rg) | 535046 |
| | G 2 | 2 x 35 | A 8 | 1 | Cast iron (GG) | 535047 |
| | G 2 1/4 | 2 x 5 | A 21 | 2 | Cast iron (GG) | 535114 |
| G 2 | G 2 | 1 x 20 | A 9 | 1 | Bronze (Rg) | 535048 |
| | G 2 | 1 x 26 | A 10 | 1 | Cast iron (GG) | 535049 |
| | G 2 | 1 x 70 | A 11 | 1 | Cast iron (GG) | 535050 |

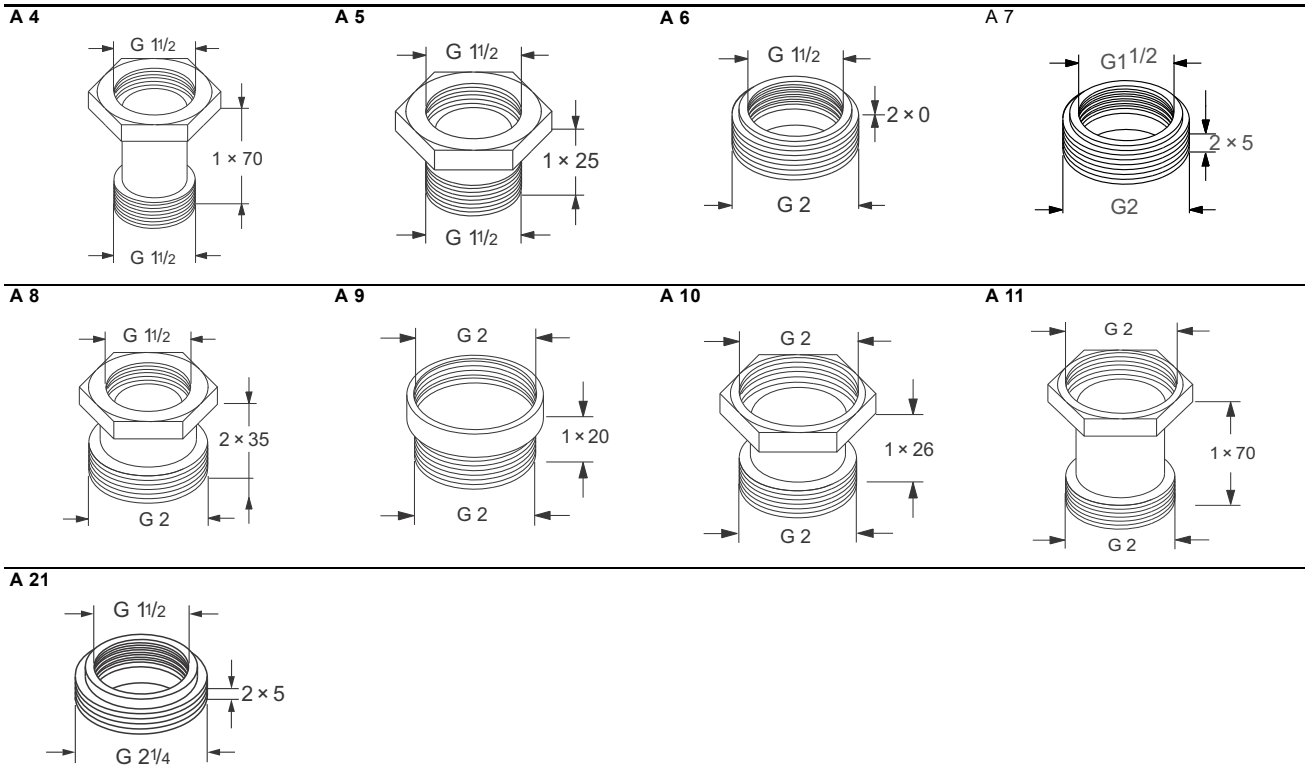


## Thread types

G-threads have a cylindrical form in accordance with the EN-ISO 228-1 standard.

R-threads have a conical form in accordance with the ISO 7-1 standard.

In the case of a thread of size 1 1/2", for example, the threads are specified as G1 1/2 or R1 1/2. Male G-threads (cylindrical) can only be screwed into female G-threads. Male R-threads (conical) can be screwed into female G or R-threads. See fig. 69.

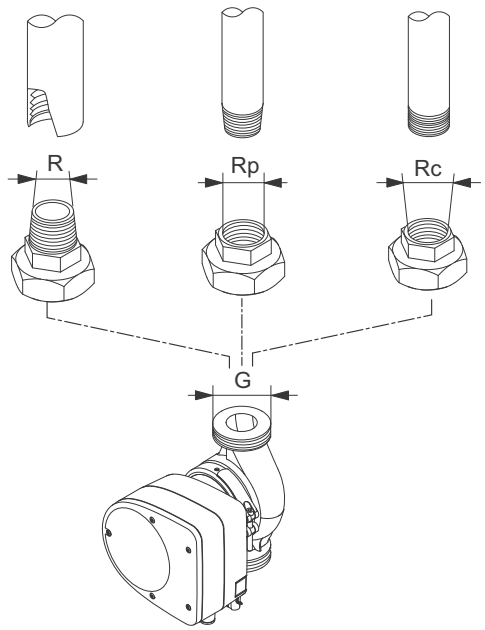


**Fig. 69** G-thread and R-thread

## Thread-flange adapters

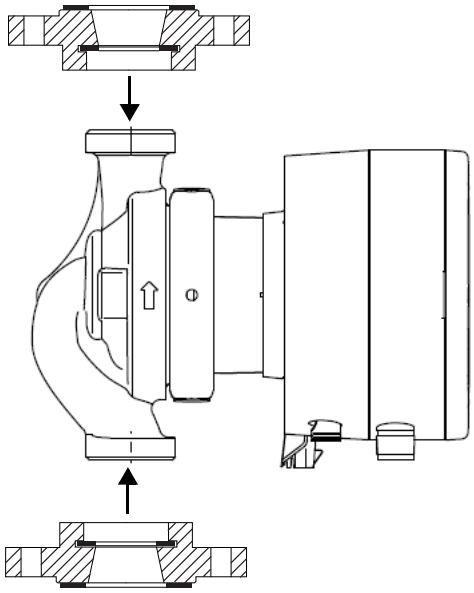

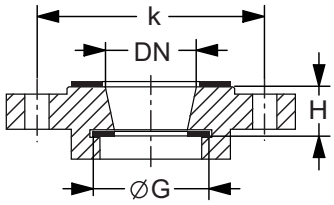


Figure 3

**Fig. 70** Example of thread-flange adapters

| New pump Connection G | Flange Connection DN | Adapter length H [mm] | k [mm] | Adapter type | Figure | Material | Product number PN 6 | Product number PN 10 |
|---|---|---|---|---|---|---|---|---|
| G 1 1/2 | DN 32* | 2 x 0 | 90 | A 16 | 3 | Cast iron (GG) | 535055** | 535055** |
| | DN 32 | 2 x 20 | 90 | A 14 | 3 | Cast iron (GG) | 535053 | |
| | DN 40 | 2 x 20 | 100 | A 17 | 3 | Cast iron (GG) | 535056 | |
| | DN 50 | 1 x 20 | 110 | A 19 | 3 | Steel (St) | 535058 | |
| G 2 | DN 32* | 1 x 10 | 90 | A 22 | 3 | Cast iron (GG) | 535115** | 535115** |
| | DN 32 | 2 x 20 | 90 | A 15 | 3 | Cast iron (GG) | 535054 | |
| | DN 40 | 2 x 20 | 100 | A 18 | 3 | Cast iron (GG) | 98614387** | 98614387** |
| | DN 50 | 2 x 20 | 110 | A 20 | 3 | Cast iron (GG) | 98614411** | 98614411** |

* Grundfos square flange

** Combination flange PN 6/PN 10

**A 14**

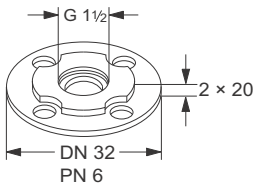


**A 15**

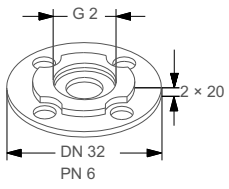


**A 16**

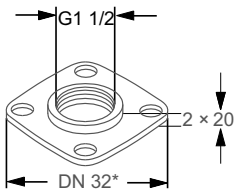


**A 17**

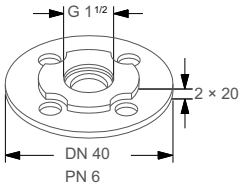


**A 18**

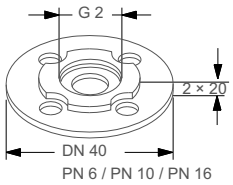


**A 19**

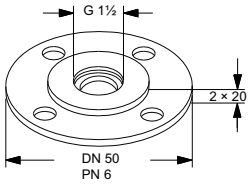


**A 20**

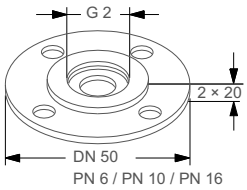


**A 22**

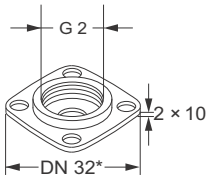

## Flange-flange adapters

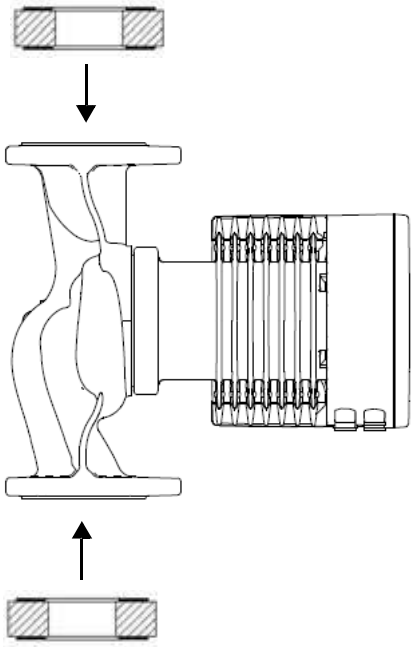

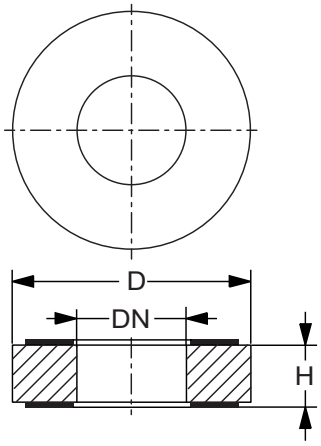


Figure 4

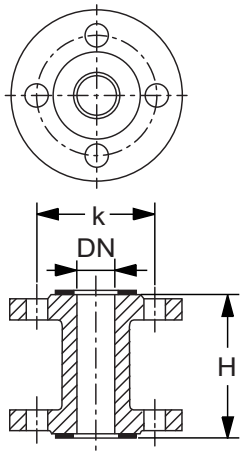


Figure 5

**Fig. 71** Example of flange-flange adapters

| New pump Connection DN | Adapter length H [mm] | k [mm] PN 6 | k [mm] PN 10 | D [mm] PN 6 | D [mm] PN 10 | Adapter type | Figure | Material | Product number PN 6 | Product number PN 10/16 |
|---|---|---|---|---|---|---|---|---|---|---|
| DN 40 | 1 x 70 | 100 | 110 | | | A 40-70 | 5 | Steel (St) | 539921 | 539721 |
| | 1 x 30 | | | 82 | 88 | A 40-30 | 4 | Steel (St) | 96281076 | 96608515 |
| DN 50 | 1 x 10 | | | 90 | 102 | A 50-10 | 4 | Steel (St) | 549921 | 549821 |
| | 1 x 20 | | | 90 | 102 | A 50-20 | 4 | Steel (St) | 549922 | 549822 |
| | 1 x 40 | | | 90 | 102 | A 50-40 | 4 | Steel (St) | 96281077 | 96608516 |
| | 1 x 50 | | | 90 | 102 | A 50-50 | 4 | Steel (St) | 549923 | 549823 |
| | 1 x 60 | 110 | 125 | | | A 50-60 | 5 | Steel (St) | 549924 | 549824 |
| DN 65 | 1 x 10 | | | 110 | 122 | A 65-10 | 4 | Steel (St) | 559921 | 559821 |
| | 1 x 25 | | | 110 | 122 | A 65-25 | 4 | Steel (St) | 559922 | 559822 |
| | 1 x 160 | 130 | 145 | | | A 65-160 | 5 | Steel (St) | 559923 | 559823 |
| DN 80 | 1 x 10 | | | 127 | 138 | A 80-10 | 4 | Steel (St) | 569921 | 569821 |
| | 1 x 15 | | | 127 | 138 | A 80-15 | 4 | Steel (St) | 569922 | 569822 |
| | 1 x 20 | | | 127 | 138 | A 80-20 | 4 | Steel (St) | 569923 | 569823 |
| | 1 x 25 | | | 127 | 138 | A 80-25 | 4 | Steel (St) | 569924 | 569824 |
| | 1 x 40 | | | 127 | 138 | A 80-40 | 4 | Steel (St) | 569925 | 569825 |
| | 1 x 50 | | | 127 | 138 | A 80-50 | 4 | Steel (St) | 569926 | 569826 |
| | 1 x 140 | 150 | 165 | | | A 80-140 | 5 | Steel (St) | 569927 | 569827 |
| DN 100 | 2 x 23 | | | | 106 | A 100-50 | 4 | Steel (St) | | 96555529 |

**A 40-30**

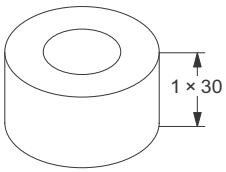


**A 40-70**

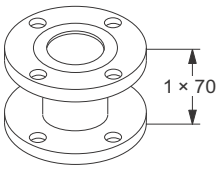


**A 50-10**

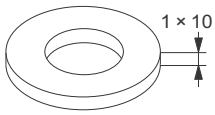


**A 50-20**

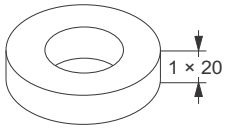


**A 50-40**

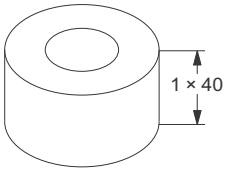


**A 50-50**

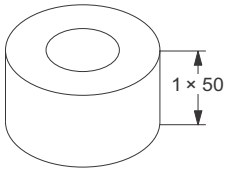


**A 50-60**

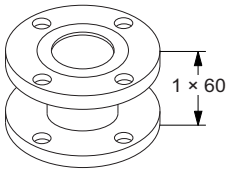


**A 65-10**

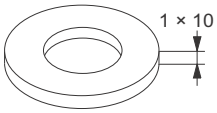


**A 65-25**

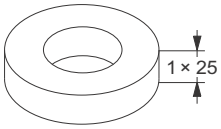


**A 65-160**

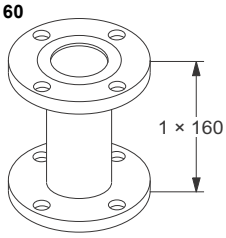


**A 80-10**

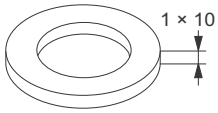


**A 80-15**

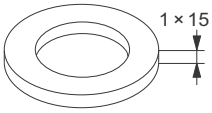


**A 80-20**

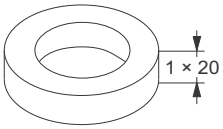


**A 80-25**

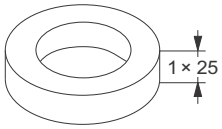


**A 80-40**

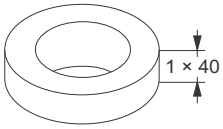


**A 80-50**

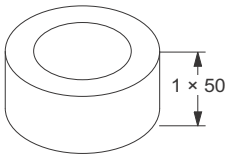


**A 80-140**

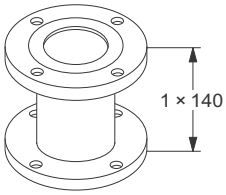


**A 100-50**

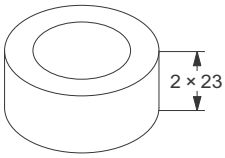

# 12. Product numbers

## Single-head pumps

| Pump type | Port-to-port length [mm] | Threaded pipe connection | | | Data sheet Page |
|---|---|---|---|---|---|
| | | Cast iron | | Stainless steel | |
| | | PN 10 | PN 16 | PN 10 | |
| MAGNA3 25-40 (N) | 180 | 97924244 | 97924249 | 97924336 | 46 |
| MAGNA3 25-60 (N) | 180 | 97924245 | 97924250 | 97924337 | 47 |
| MAGNA3 25-80 (N) | 180 | 97924246 | 97924251 | 97924338 | 48 |
| MAGNA3 25-100 (N) | 180 | 97924247 | 97924252 | 97924339 | 49 |
| MAGNA3 25-120 (N) | 180 | 97924248 | 97924253 | 97924340 | 50 |
| MAGNA3 32-40 (N) | 180 | 97924254 | 97924260 | 97924341 | 51 |
| MAGNA3 32-60 (N) | 180 | 97924255 | 97924261 | 97924342 | 53 |
| MAGNA3 32-80 (N) | 180 | 97924256 | 97924262 | 97924343 | 55 |
| MAGNA3 32-100 (N) | 180 | 97924257 | 97924263 | 97924344 | 57 |
| MAGNA3 32-120 (N) | 180 | 98609707 | 98609709 | 98609711 | 59 |

| Pump type | Port-to-port length [mm] | Flange connection | | | | | Data sheet Page |
|---|---|---|---|---|---|---|---|
| | | Cast iron | | | | Stainless steel | |
| | | PN 6 | PN 10 | PN 6/10 | PN 16 | PN 6/10 | |
| MAGNA3 32-40 F (N) | 220 | | | 98333834 | 98333832 | 98333836 | 60 |
| MAGNA3 32-60 F (N) | 220 | | | 98333854 | 98333852 | 98333856 | 62 |
| MAGNA3 32-80 F (N) | 220 | | | 98333874 | 98333872 | 98333876 | 64 |
| MAGNA3 32-100 F (N) | 220 | | | 97924258 | 97924264 | 97924345 | 66 |
| MAGNA3 32-120 F (N) | 220 | | | 97924259 | 97924265 | 97924346 | 68 |
| MAGNA3 40-40 F (N) | 220 | | | 97924266 | 97924273 | 97924347 | 70 |
| MAGNA3 40-60 F (N) | 220 | | | 97924267 | 97924274 | 97924348 | 72 |
| MAGNA3 40-80 F (N) | 220 | | | 97924268 | 97924275 | 97924349 | 74 |
| MAGNA3 40-100 F (N) | 220 | | | 97924269 | 97924276 | 97924350 | 76 |
| MAGNA3 40-120 F (N) | 250 | | | 97924270 | 97924277 | 97924351 | 78 |
| MAGNA3 40-150 F (N) | 250 | | | 97924271 | 97924278 | 97924352 | 80 |
| MAGNA3 40-180 F (N) | 250 | | | 97924272 | 97924279 | 97924353 | 82 |
| MAGNA3 50-40 F (N) | 240 | | | 97924280 | 97924287 | 97924354 | 84 |
| MAGNA3 50-60 F (N) | 240 | | | 97924281 | 97924288 | 97924355 | 86 |
| MAGNA3 50-80 F (N) | 240 | | | 97924282 | 97924289 | 97924356 | 88 |
| MAGNA3 50-100 F (N) | 280 | | | 97924283 | 97924290 | 97924357 | 90 |
| MAGNA3 50-120 F (N) | 280 | | | 97924284 | 97924291 | 97924358 | 92 |
| MAGNA3 50-150 F (N) | 280 | | | 97924285 | 97924292 | 97924359 | 94 |
| MAGNA3 50-180 F (N) | 280 | | | 97924286 | 97924293 | 97924360 | 96 |
| MAGNA3 65-40 F (N) | 340 | | | 97924294 | 97924300 | 97924361 | 98 |
| MAGNA3 65-60 F (N) | 340 | | | 97924295 | 97924301 | 97924362 | 100 |
| MAGNA3 65-80 F (N) | 340 | | | 97924296 | 97924302 | 97924363 | 102 |
| MAGNA3 65-100 F (N) | 340 | | | 97924297 | 97924303 | 97924364 | 104 |
| MAGNA3 65-120 F (N) | 340 | | | 97924298 | 97924304 | 97924365 | 106 |
| MAGNA3 65-150 F (N) | 340 | | | 97924299 | 97924305 | 97924366 | 108 |
| MAGNA3 80-40 F | 360 | 97924306 | 97924316 | | 97924326 | | 110 |
| MAGNA3 80-60 F | 360 | 97924307 | 97924317 | | 97924327 | | 112 |
| MAGNA3 80-80 F | 360 | 97924308 | 97924318 | | 97924328 | | 114 |
| MAGNA3 80-100 F | 360 | 97924309 | 97924319 | | 97924329 | | 116 |
| MAGNA3 80-120 F | 360 | 97924310 | 97924320 | | 97924330 | | 118 |
| MAGNA3 100-40 F | 450 | 97924311 | 97924321 | | 97924331 | | 120 |
| MAGNA3 100-60 F | 450 | 97924312 | 97924322 | | 97924332 | | 122 |
| MAGNA3 100-80 F | 450 | 97924313 | 97924323 | | 97924333 | | 124 |
| MAGNA3 100-100 F | 450 | 97924314 | 97924324 | | 97924334 | | 126 |
| MAGNA3 100-120 F | 450 | 97924315 | 97924325 | | 97924335 | | 128 |

## Twin-head pumps

| Pump type | Port-to-port length [mm] | Threaded pipe connection | | Data sheet Page |
|---|---|---|---|---|
| | | Cast iron | | |
| | | PN 10 | PN 16 | |
| MAGNA3 D 32-40 | 180 | 97924449 | 97924455 | 52 |
| MAGNA3 D 32-60 | 180 | 97924450 | 97924456 | 54 |
| MAGNA3 D 32-80 | 180 | 97924451 | 97924457 | 56 |
| MAGNA3 D 32-100 | 180 | 97924452 | 97924458 | 58 |

| Pump type | Port-to-port length [mm] | Flange connection | | | | Data sheet Page |
|---|---|---|---|---|---|---|
| | | Cast iron | | | | |
| | | PN 6 | PN 10 | PN 6/10 | PN 16 | |
| MAGNA3 D 32-40 F | 220 | | | 98333840 | 98333838 | 61 |
| MAGNA3 D 32-60 F | 220 | | | 98333860 | 98333858 | 63 |
| MAGNA3 D 32-80 F | 220 | | | 98333880 | 98333878 | 65 |
| MAGNA3 D 32-100 F | 220 | | | 97924453 | 97924459 | 67 |
| MAGNA3 D 32-120 F | 220 | | | 97924454 | 97924460 | 69 |
| MAGNA3 D 40-40 F | 220 | | | 97924461 | 97924468 | 71 |
| MAGNA3 D 40-60 F | 220 | | | 97924462 | 97924469 | 73 |
| MAGNA3 D 40-80 F | 220 | | | 97924463 | 97924470 | 75 |
| MAGNA3 D 40-100 F | 220 | | | 97924464 | 97924471 | 77 |
| MAGNA3 D 40-120 F | 250 | | | 97924465 | 97924472 | 79 |
| MAGNA3 D 40-150 F | 250 | | | 97924466 | 97924473 | 81 |
| MAGNA3 D 40-180 F | 250 | | | 97924467 | 97924474 | 83 |
| MAGNA3 D 50-40 F | 240 | | | 97924475 | 97924482 | 85 |
| MAGNA3 D 50-60 F | 240 | | | 97924476 | 97924483 | 87 |
| MAGNA3 D 50-80 F | 240 | | | 97924477 | 97924484 | 89 |
| MAGNA3 D 50-100 F | 280 | | | 97924478 | 97924485 | 91 |
| MAGNA3 D 50-120 F | 280 | | | 97924479 | 97924486 | 93 |
| MAGNA3 D 50-150 F | 280 | | | 97924480 | 97924487 | 95 |
| MAGNA3 D 50-180 F | 280 | | | 97924481 | 97924488 | 97 |
| MAGNA3 D 65-40 F | 340 | | | 97924489 | 97924495 | 99 |
| MAGNA3 D 65-60 F | 340 | | | 97924490 | 97924496 | 101 |
| MAGNA3 D 65-80 F | 340 | | | 97924491 | 97924497 | 103 |
| MAGNA3 D 65-100 F | 340 | | | 97924492 | 97924498 | 105 |
| MAGNA3 D 65-120 F | 340 | | | 97924493 | 97924499 | 107 |
| MAGNA3 D 65-150 F | 340 | | | 97924494 | 97924500 | 109 |
| MAGNA3 D 80-40 F | 360 | 97924501 | 97924511 | | 97924521 | 111 |
| MAGNA3 D 80-60 F | 360 | 97924502 | 97924512 | | 97924522 | 113 |
| MAGNA3 D 80-80 F | 360 | 97924503 | 97924513 | | 97924523 | 115 |
| MAGNA3 D 80-100 F | 360 | 97924504 | 97924514 | | 97924524 | 117 |
| MAGNA3 D 80-120 F | 360 | 97924505 | 97924515 | | 97924525 | 119 |
| MAGNA3 D 100-40 F | 450 | 97924506 | 97924516 | | 97924526 | 121 |
| MAGNA3 D 100-60 F | 450 | 97924507 | 97924517 | | 97924527 | 123 |
| MAGNA3 D 100-80 F | 450 | 97924508 | 97924518 | | 97924528 | 125 |
| MAGNA3 D 100-100 F | 450 | 97924509 | 97924519 | | 97924529 | 127 |
| MAGNA3 D 100-120 F | 450 | 97924510 | 97924520 | | 97924530 | 129 |

# 13. MAGNA3 for the German market

## Single-head pumps

| Pump type | Port-to-port length [mm] | Threaded pipe connection | | | Data sheet Page |
|---|---|---|---|---|---|
| | | Cast iron | | Stainless steel | |
| | | PN 10 | PN 16 | PN 10 | |
| MAGNA3 25-40 (N) | 180 | 97924623 | 97924628 | 97924716 | 46 |
| MAGNA3 25-60 (N) | 180 | 97924624 | 97924629 | 97924717 | 47 |
| MAGNA3 25-80 (N) | 180 | 97924625 | 97924630 | 97924718 | 48 |
| MAGNA3 25-100 (N) | 180 | 97924626 | 97924631 | 97924719 | 49 |
| MAGNA3 25-120 (N) | 180 | 97924627 | 97924632 | 97924720 | 50 |
| MAGNA3 32-40 (N) | 180 | 97924633 | 97924639 | 97924721 | 51 |
| MAGNA3 32-60 (N) | 180 | 97924634 | 97924640 | 97924722 | 53 |
| MAGNA3 32-80 (N) | 180 | 97924635 | 97924641 | 97924723 | 55 |
| MAGNA3 32-100 (N) | 180 | 97924636 | 97924642 | 97924724 | 57 |
| MAGNA3 32-120 (N) | 180 | 98609708 | 98609710 | 98609712 | 59 |

| Pump type | Port-to-port length [mm] | Flange connection | | | | | Data sheet Page |
|---|---|---|---|---|---|---|---|
| | | Cast iron | | | | Stainless steel | |
| | | PN 6 | PN 10 | PN 6/10 | PN 16 | PN 6/10 | |
| MAGNA3 32-40 F (N) | 220 | | | 98333835 | 98333833 | 98333837 | 60 |
| MAGNA3 32-60 F (N) | 220 | | | 98333855 | 98333853 | 98333857 | 62 |
| MAGNA3 32-80 F (N) | 220 | | | 98333875 | 98333873 | 98333877 | 64 |
| MAGNA3 32-100 F (N) | 220 | | | 97924637 | 97924643 | 97924725 | 66 |
| MAGNA3 32-120 F (N) | 220 | | | 97924638 | 97924644 | 97924726 | 68 |
| MAGNA3 40-40 F (N) | 220 | | | 97924645 | 97924652 | 97924727 | 70 |
| MAGNA3 40-60 F (N) | 220 | | | 97924646 | 97924653 | 97924728 | 72 |
| MAGNA3 40-80 F (N) | 220 | | | 97924647 | 97924654 | 97924729 | 74 |
| MAGNA3 40-100 F (N) | 220 | | | 97924648 | 97924655 | 97924730 | 76 |
| MAGNA3 40-120 F (N) | 250 | | | 97924649 | 97924656 | 97924731 | 78 |
| MAGNA3 40-150 F (N) | 250 | | | 97924650 | 97924657 | 97924732 | 80 |
| MAGNA3 40-180 F (N) | 250 | | | 97924651 | 97924658 | 97924733 | 82 |
| MAGNA3 50-40 F (N) | 240 | | | 97924659 | 97924666 | 97924734 | 84 |
| MAGNA3 50-60 F (N) | 240 | | | 97924660 | 97924668 | 97924735 | 86 |
| MAGNA3 50-80 F (N) | 240 | | | 97924661 | 97924669 | 97924736 | 88 |
| MAGNA3 50-100 F (N) | 280 | | | 97924662 | 97924670 | 97924737 | 90 |
| MAGNA3 50-120 F (N) | 280 | | | 97924663 | 97924671 | 97924738 | 92 |
| MAGNA3 50-150 F (N) | 280 | | | 97924664 | 97924672 | 97924739 | 94 |
| MAGNA3 50-180 F (N) | 280 | | | 97924665 | 97924673 | 97924740 | 96 |
| MAGNA3 65-40 F (N) | 340 | | | 97924674 | 97924680 | 97924741 | 98 |
| MAGNA3 65-60 F (N) | 340 | | | 97924675 | 97924681 | 97924742 | 100 |
| MAGNA3 65-80 F (N) | 340 | | | 97924676 | 97924682 | 97924743 | 102 |
| MAGNA3 65-100 F (N) | 340 | | | 97924677 | 97924683 | 97924744 | 104 |
| MAGNA3 65-120 F (N) | 340 | | | 97924678 | 97924684 | 97924745 | 106 |
| MAGNA3 65-150 F (N) | 340 | | | 97924679 | 97924685 | 97924746 | 108 |
| MAGNA3 80-40 F | 360 | 97924686 | 97924696 | | 97924706 | | 110 |
| MAGNA3 80-60 F | 360 | 97924687 | 97924697 | | 97924707 | | 112 |
| MAGNA3 80-80 F | 360 | 97924688 | 97924698 | | 97924708 | | 114 |
| MAGNA3 80-100 F | 360 | 97924689 | 97924699 | | 97924709 | | 116 |
| MAGNA3 80-120 F | 360 | 97924690 | 97924700 | | 97924710 | | 118 |
| MAGNA3 100-40 F | 450 | 97924691 | 97924701 | | 97924711 | | 120 |
| MAGNA3 100-60 F | 450 | 97924692 | 97924702 | | 97924712 | | 122 |
| MAGNA3 100-80 F | 450 | 97924693 | 97924703 | | 97924713 | | 124 |
| MAGNA3 100-100 F | 450 | 97924694 | 97924704 | | 97924714 | | 126 |
| MAGNA3 100-120 F | 450 | 97924695 | 97924705 | | 97924715 | | 128 |

## Twin-head pumps

| Pump type | Port-to-port length [mm] | Threaded pipe connection | | Data sheet Page |
|---|---|---|---|---|
| | | Cast iron | | |
| | | PN 10 | PN 16 | |
| MAGNA3 D 32-40 | 180 | 97924829 | 97924835 | 52 |
| MAGNA3 D 32-60 | 180 | 97924830 | 97924836 | 54 |
| MAGNA3 D 32-80 | 180 | 97924831 | 97924837 | 56 |
| MAGNA3 D 32-100 | 180 | 97924832 | 97924838 | 58 |

| Pump type | Port-to-port length [mm] | Flange connection | | | | Data sheet Page |
|---|---|---|---|---|---|---|
| | | Cast iron | | | | |
| | | PN 6 | PN 10 | PN 6/10 | PN 16 | |
| MAGNA3 D 32-40 F | 220 | | | 98333841 | 98333839 | 61 |
| MAGNA3 D 32-60 F | 220 | | | 98333861 | 98333859 | 63 |
| MAGNA3 D 32-80 F | 220 | | | 98333881 | 98333879 | 65 |
| MAGNA3 D 32-100 F | 220 | | | 97924833 | 97924839 | 67 |
| MAGNA3 D 32-120 F | 220 | | | 97924834 | 97924840 | 69 |
| MAGNA3 D 40-40 F | 220 | | | 97924841 | 97924848 | 71 |
| MAGNA3 D 40-60 F | 220 | | | 97924842 | 97924849 | 73 |
| MAGNA3 D 40-80 F | 220 | | | 97924843 | 97924850 | 75 |
| MAGNA3 D 40-100 F | 220 | | | 97924844 | 97924851 | 77 |
| MAGNA3 D 40-120 F | 250 | | | 97924845 | 97924852 | 79 |
| MAGNA3 D 40-150 F | 250 | | | 97924846 | 97924853 | 81 |
| MAGNA3 D 40-180 F | 250 | | | 97924847 | 97924854 | 83 |
| MAGNA3 D 50-40 F | 240 | | | 97924855 | 97924862 | 85 |
| MAGNA3 D 50-60 F | 240 | | | 97924856 | 97924863 | 87 |
| MAGNA3 D 50-80 F | 240 | | | 97924857 | 97924864 | 89 |
| MAGNA3 D 50-100 F | 280 | | | 97924858 | 97924865 | 91 |
| MAGNA3 D 50-120 F | 280 | | | 97924859 | 97924866 | 93 |
| MAGNA3 D 50-150 F | 280 | | | 97924860 | 97924867 | 95 |
| MAGNA3 D 50-180 F | 280 | | | 97924861 | 97924868 | 97 |
| MAGNA3 D 65-40 F | 340 | | | 97924869 | 97924875 | 99 |
| MAGNA3 D 65-60 F | 340 | | | 97924870 | 97924876 | 101 |
| MAGNA3 D 65-80 F | 340 | | | 97924871 | 97924877 | 103 |
| MAGNA3 D 65-100 F | 340 | | | 97924872 | 97924878 | 105 |
| MAGNA3 D 65-120 F | 340 | | | 97924873 | 97924879 | 107 |
| MAGNA3 D 65-150 F | 340 | | | 97924874 | 97924880 | 109 |
| MAGNA3 D 80-40 F | 360 | 97924881 | 97924891 | | 97924901 | 111 |
| MAGNA3 D 80-60 F | 360 | 97924882 | 97924892 | | 97924902 | 113 |
| MAGNA3 D 80-80 F | 360 | 97924883 | 97924893 | | 97924903 | 115 |
| MAGNA3 D 80-100 F | 360 | 97924884 | 97924894 | | 97924904 | 117 |
| MAGNA3 D 80-120 F | 360 | 97924885 | 97924895 | | 97924905 | 119 |
| MAGNA3 D 100-40 F | 450 | 97924886 | 97924896 | | 97924906 | 121 |
| MAGNA3 D 100-60 F | 450 | 97924887 | 97924897 | | 97924907 | 123 |
| MAGNA3 D 100-80 F | 450 | 97924888 | 97924898 | | 97924908 | 125 |
| MAGNA3 D 100-100 F | 450 | 97924889 | 97924899 | | 97924909 | 127 |
| MAGNA3 D 100-120 F | 450 | 97924890 | 97924900 | | 97924910 | 129 |

# 14. Grundfos Product Center

Online search and sizing tool to help you make the right choice.
*http://product-selection.grundfos.com*

**All the information you need in one place**

Performance curves, technical specifications, pictures, dimensional drawings, motor curves, wiring diagrams, spare parts, service kits, 3D drawings, documents, system parts. The Product Center displays any recent and saved items - including complete projects - right on the main page.

**Downloads**

On the product pages, you can download installation and operating instructions, data booklets, service instructions, etc. in PDF format.

TM07 2384

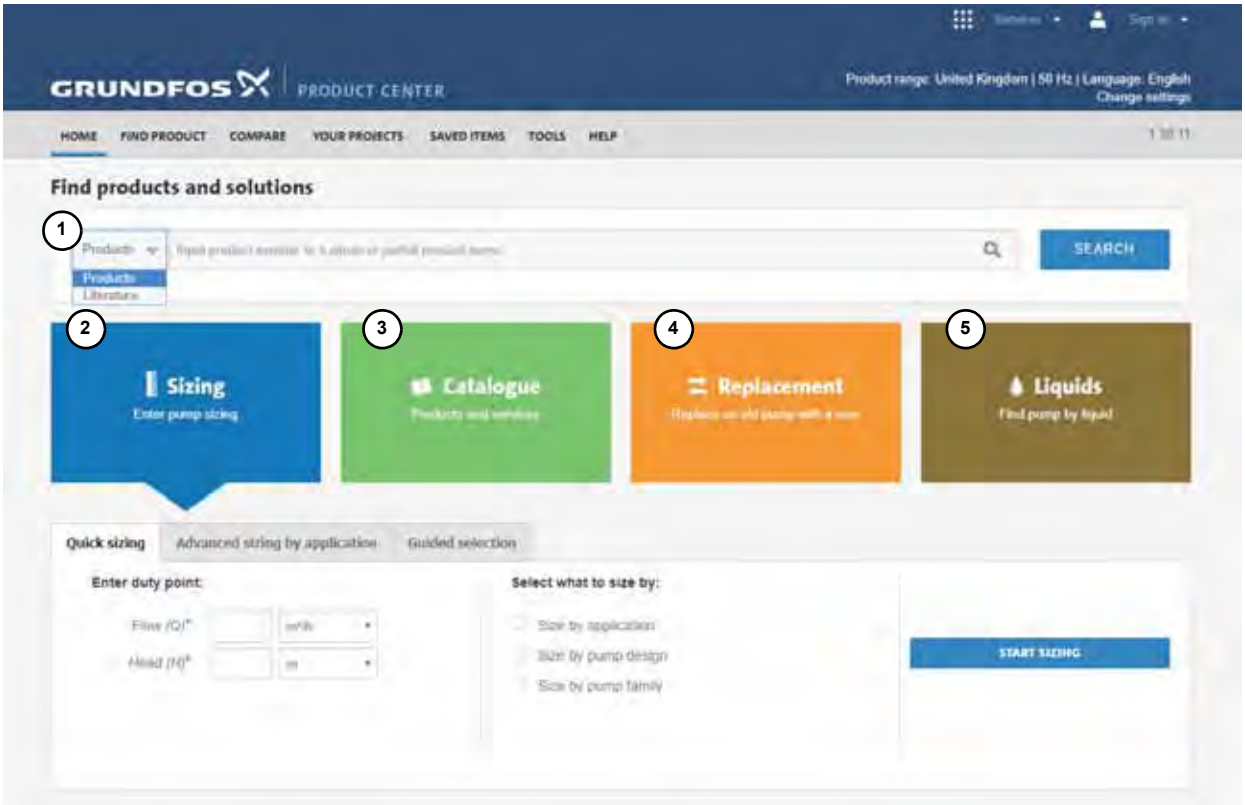


TM07 2383

| Pos. | Description |
|---|---|
| 1 | This drop-down menu enables you to set the search function to "Products" or "Literature". |
| 2 | **SIZING** enables you to size a pump based on entered data and selection choices. |
| 3 | **CATALOGUE** gives you access to the Grundfos product catalogue. |
| 4 | **REPLACEMENT** enables you to find a replacement product.<br>Search results will include information on<br>• the lowest purchase price<br>• the lowest energy consumption<br>• the lowest total life cycle cost. |
| 5 | **LIQUIDS** enables you to find pumps designed for aggressive, flammable or other special liquids. |

be think innovate

© 2020 Grundfos Holding A/S, all rights reserved.

Trademarks displayed in this material, including but not limited to Grundfos, the Grundfos logo and "be think innovate" are registered trademarks owned by The Grundfos Group. All rights reserved.

**99218286** 08.2020

ECM: 1290594

**GRUNDFOS A/S**
DK-8850 Bjerringbro . Denmark
Telephone: +45 87 50 14 00
www.grundfos.com

GRUNDFOS